BLACKBOX 800Z
ELECTRONICS SET-UP SHEET

Voltage input:	7.4/ 2S LiPo
On resistance (Ω)	0.0004
Continuous current (A)	80
Weight without wires (g)	37
Motor limit	10.5T
SBEC	6.0V/3A

DRIVER: Sean Cochran **EVENT:** Club Race **TRACK:** OCRC **DATE:** Nov. 2015

VEHICLE: B5M-FL **CONDITIONS:** **BATTERY:** Reedy #319 **TEMP:** 65F

ESC INFO

CAPACITOR TYPE:	Standard
WIRE SIZE:	13 AWG

BRAKE

DRAG BRAKE:	20%
BRAKE FREQ:	4K

THROTTLE

THROTTLE FREQ:	4K
POWER PROFILE:	3

MISC CONTROL

OPERATION MODE:	For/Brk

MOTOR SETTINGS

MOTOR:	Reedy Sonic M3
WIND:	17.5t
TIMING:	48
ROTOR:	273
FDR/ROLLOUT:	6.04
TEMPERATURE:	125F

RADIO SETTINGS

THROTTLE EPA:	100
BRAKE EPA:	85
THROTTLE EXPO:	0
BRAKE EXPO:	-15%

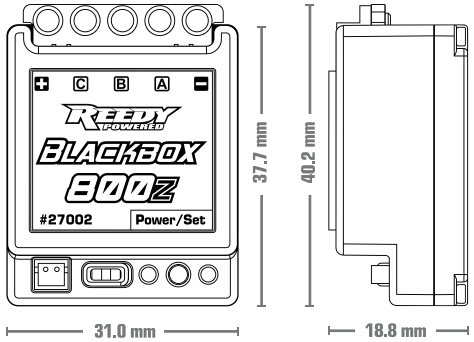

NOTES:

www.facebook.com/ReedyPower

twitter.com/ReedyPower

www.ReedyPower.com