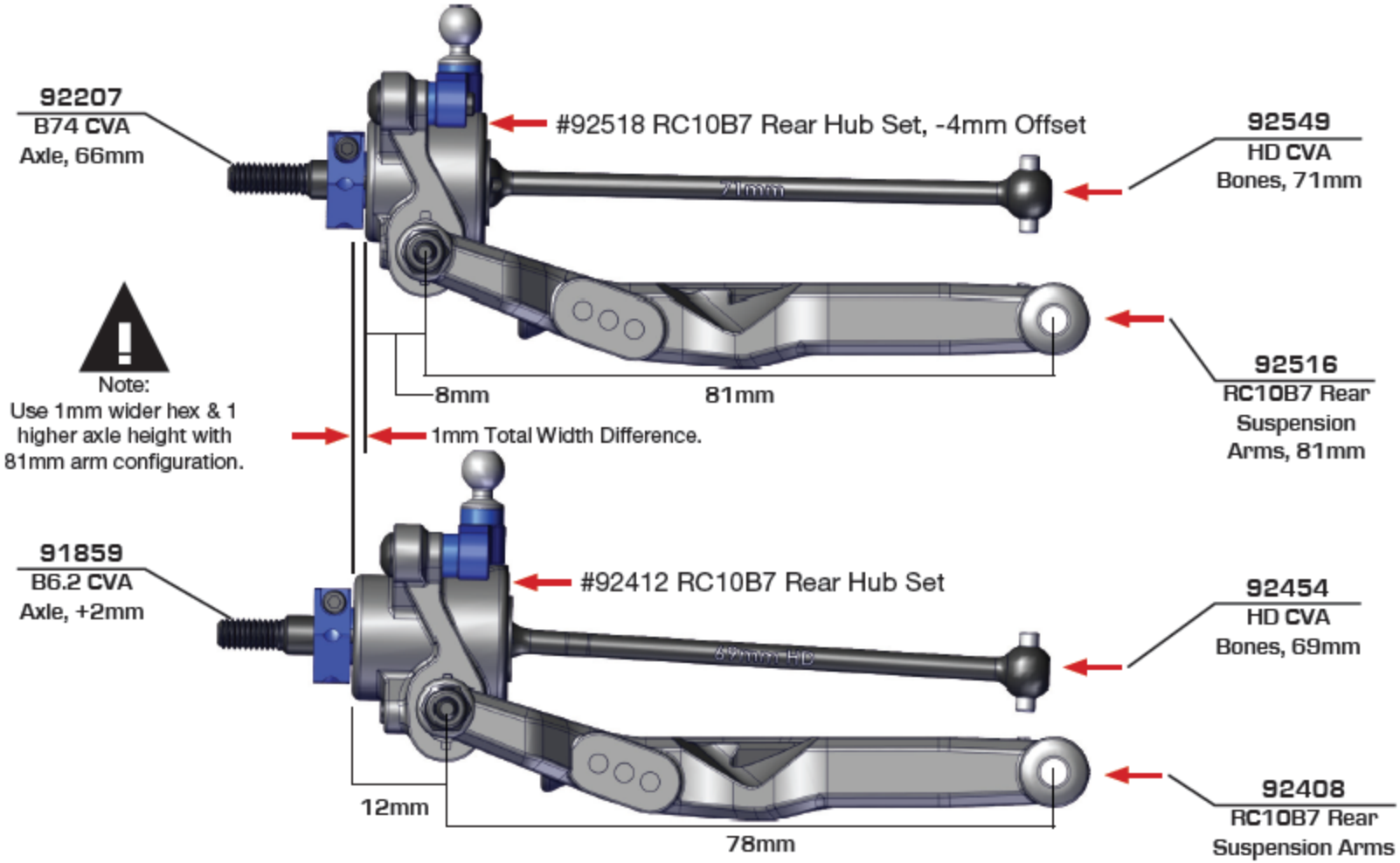:: B84 81mm Rear Arm and -4mm Rear Hub