BLACKBOX 800Z

ELECTRONICS SET-UP SHEET

Voltage input:	7.4/ 2S LiPo
On resistance (Ω)	0.0004
Continuous current (A)	80
Weight without wires (g)	37
Motor limit	10.5T
SBEC	6.0V/3A

DRIVER: _____ EVENT: _____ TRACK: _____ DATE: _____

VEHICLE: _____ CONDITIONS: _____ BATTERY: _____ TEMP: _____

ESC INFO

CAPACITOR TYPE:	
WIRE SIZE:	

BRAKE

DRAG BRAKE:	
BRAKE FREQ:	

THROTTLE

THROTTLE FREQ:	
POWER PROFILE:	

MISC CONTROL

OPERATION MODE:	

MOTOR SETTINGS

MOTOR:	
WIND:	
TIMING:	
ROTOR:	
FDR/ROLLOUT:	
TEMPERATURE:	

RADIO SETTINGS

THROTTLE EPA:	
BRAKE EPA:	
THROTTLE EXPO:	
BRAKE EXPO:	

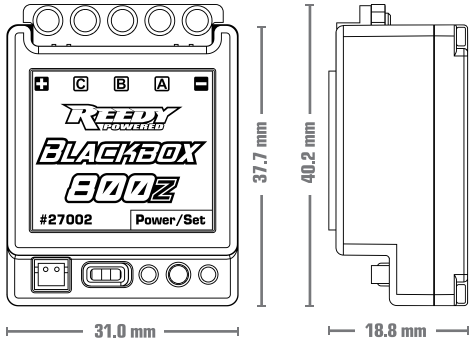

NOTES:

www.facebook.com/ReedyPower

twitter.com/ReedyPower

www.ReedyPower.com