RC8 T3.1 TEAM KIT

RC8 T3.1e TEAM KIT

#80937 RC8T3.1 Team Kit
#80938 RC8T3.1e Team Kit

1:8 Scale Nitro & Electric 4WD Off Road Truggy Kit Manual & Catalog

TEAM ASSOCIATED

Designed in California, USA

:: Introduction

Thank you for purchasing this Team Associated product. This assembly manual contains instructions and tips for building and maintaining your new RC8T3.1/RC8T3.1e Kit. Please take a moment to read through this manual to help familiarize yourself with these steps. We are continually changing and improving our designs; therefore, actual parts may appear slightly different than in the illustrations. New parts will be noted on supplementary sheets located in the appropriate parts bags.
Check each bag for these sheets before you start to build.

:: RC8T3.1 / RC8T3.1e KIT Features

- New V3 differentials offer increased fluid capacity and more consistent feel lap after lap.
- CVA driveshafts increase traction and chassis support.
- Suspension arms have been updated to race specs.
- All suspension arm pivots have been revised for more ground clearance resulting in better jumping and landing while also improving durability.
- 16mm Big Bore 6061 aluminum shock bodies and bleeder style caps.
- 20mm I.D. shock springs for optimal spring rates.
- +2mm steering block arms included for a smooth and precise steering feel.
- Highly efficient drivetrain utilizes straight cut bevel gears to provide great acceleration and run-time.
- Improved servo saver assembly.
- Hard-anodized 7075 aluminum chassis with keyed lower suspension plates.
- Proline® "Predator" body included.
- Enclosed receiver box .
- Full Factory Team rubber-sealed ball bearings.
- Easily accessible front and rear differentials.
- 90% parts compatibility with other RC8B3.1/RC8T3.1 models, offering the perfect solution for multi-class racers.

RC8T3.1 Specific Features:
- New 4-shoe clutch provides precise power transfer and is easy to maintain.
  Optional clutch spring rates and clutchbells allows custom tuning for varying grip levels.

RC8T3.1e Specific Features:
- Two-piece sliding motor mount for easy gear mesh adjustment and motor removal.

:: Additional

Your new R/C vehicle comes as a kit. There are some items you will need to complete your kit (refer to catalog for suggestions):
- 2 channel radio/transmitter set with switch (FM/PCM/2.4GHz recommended)
- Transmitter batteries (#302)
- Steering / Throttle servos (#27100, 27101, 27106, 27107 recommended)
- 1/8th scale Truggy tires
- CA (Cyanoacrylic) glue (#1597)
- Tire Balancer (#1498)
- Needle nose pliers
- Thread locking compound (#1596)
- Reamer/hole punch
- Hobby knife
- Shock shaft pliers (#1675)
- Ride height gauge (#1449)
- Polycarbonate specific spray paint or polycarbonate specific bottled paint and airbrush

RC8T3.1 Specific Items:
- .21 class rear exhaust engine
- Muffler & manifold spring (#27313, 27315)
- 4.8-7.4v receiver battery pack - (LiPo - flat style [#304, 315, 27313], LiFe - flat style [#305, 27315], NiMH - flat style [#613])
- Fuel bottle (#1747)
- Model car fuel (30% nitro recommended)
- Glow igniter (#1738)
- Starter box (#1751)

RC8T3.1e Specific Items:
- 14.8v LiPo battery pack (#325, 756, 757,27312 recommended)
- Quick charger (#616, 27200 recommended)
- 1/8 scale specific electronic speed control (#27007, 27008)
- 1/8 scale specific electric motor (#905, 27407)

:: Other Helpful Items

- Silicone Shock/Diff Fluids (Refer to catalog for complete listings)
- Body Scissors (AE #1737)
- FT Turnbuckle Wrench (AE #89240)
- Soldering Iron
- Wire Cutters
- FT Hex Wrenches (AE #1519, 1655)
- Calipers or Precision Ruler
- T Handle Ratchet Driver (AE #1679)
- FT Nut Drivers (AE #1663-1668)
- Green Slime shock lube (AE #1105)

Associated Electrics, Inc.
26021 Commercentre Dr.
Lake Forest, CA 92630

Customer Service
Tel: 949.544.7500
Fax: 949.544.7501

http://www.RC10.com • http://twitter.com/Team_Associated • http://www.instagram.com/teamassociatedrc/ • http://www.facebook.com/TeamAssociated/

:: Hardware - 1:1 Scale View

Flat Head (fhcs)

2.5x6mm (4675)
2.5x8mm (31448)
3x6mm (31541)
3x8mm (25201)
Titanium (91592)
3x10mm (25202)
Titaniuim (91593)
3x12mm (25203)
Titanium (91594)
3x14mm (89208)
Titanium (91595)
4x10mm (81262)
4x12mm (89214)
4x14mm (89217)
4x16mm (81263)
4x20mm (81264)

Shims

Differential Shim Set (81381)
3.5x12x0.12mm
6x8x0.20mm
13.5x15.8x0.20mm
13.5x15.8x0.10mm
5.5x1.0mm (31382)

Button Head (bhcs)

2.5x6mm (31520)
2.5x8mm (31521)
2.5x18mm (81259)
3x6mm (31531)
Titanium (91580)
3x10mm (25211)
3x14mm (25187)
Titanium (91584)
3x16mm (89203)
Titanium (91585)
3x20mm (25188)
3x24mm (89204)
Titanium (91589)
4x10mm (89206)
4x14mm (81260)
4x16mm (81261)

Socket Head (shcs)

2x5mm (31511)
2x16mm (7184)
3x8mm (89223)
3x10mm (25620)
3x24mm (89225)

Nuts (lock/plain)

M3 Nut (91477)
M3 Alum. Locknut, Blue (31550)
M3 Locknut, Black (25215
M3 Locknut w/Flange (25612)
FT 3mm Locknuts, Blue(25392)
M4 Locknut (89216)
M4 Locknut Knurled
w/Flange (91148)
FT M4 Locknut, Blue (31551)
M4 Locknut, Serrated (91738)

Set Screws

3x3mm (25225)
3x6mm (81257)
3x10mm (4671)
3x12mm (81258)
4x4mm (7732)
5x4mm (89221)

Ball Bearings

5x8x2.5mm (8680)
5x10x4mm (91560)
6x10x3mm (31404)
6x12x4mm (91561)
8x16x5mm (91564)
8x16x5mm flanged
(91565)
15x21x4mm (91566)

:: Table of Contents

1..... Cover

2.....Introduction

3..... 1:1 Hardware "Fold Out"

4.....Table of Contents

5 - 7.....Differentials Build (Bag 1.1, 1.2)

7 - 8.....Steering / Chassis Build (Bag 2.1, 2.2)

9 - 10.....Front Gearbox Build (Bag 3.1, 3.2)

11 - 12.....Front Uprights Build (Bag 4.1, 4.2)

12 - 14.....Rear Gearbox Build (Bag 5.1, 5.2)

15 - 16.....Rear Uprights / Turnbuckles Build (5.2, 6.1)

16 - 17.....RC8T3.1 e Center Bulkhead/ Brakes Build (Bag 7.1, 7.2)

17 - 18 .....Anti-Roll Bars Build (8.1)

18 - 19.....Shocks Build (Bag 9.1)

20..... RC8T3.1 e Radio Tray Build (10.1, 10.2)

21..... RC8T3.1 e Receiver Box / Linkage Build (Bag 11.1, 11.2)

22 - 23.....RC8T3.1 Center Bulkhead / Brakes (Bag 7.2, 7.2)

23 - 25..... RC8T3.1 Radio Tray Build (Bag 10.1, 10.2)

26 - 27..... RC8T3.1 Servo / Linkage Build (Bag 11.1, 11.2)

27 - 30.....Engine / Tank Build (Bag 12.1, 12.2)

31.....Wheels / Tires / Body (Misc)

32.....Droop Settings

33 - 45.....Catalog

46 - 47.....RC8T3.1 e Setup Sheets

48 - 49.....RC8T3.1 Setup Sheets

50.....Back Cover

:: Notes

This symbol indicates a special note or instruction in the manual.

This symbol indicates a Racers Tip.

There is a 1:1 hardware foldout page in the front of the manual. To check the size of a part, line up your hardare with the correct drawing until you find the exact size. Each part in the foldout has a number assigned to it for ordering replacement parts.

Associated Electrics, Inc.
26021 Commercentre Dr.
Lake Forest, CA 92630

Customer Service
Tel: 949.544.7500
Fax: 949.544.7501

http://www.RC10.com · http://twitter.com/Team_Associated · http://www.instagram.com/teamassociatedrc/ · http://www.facebook.com/TeamAssociated/

:: Differential Build (Front and Rear) - Bag 1.1, 1.2 - Step 1

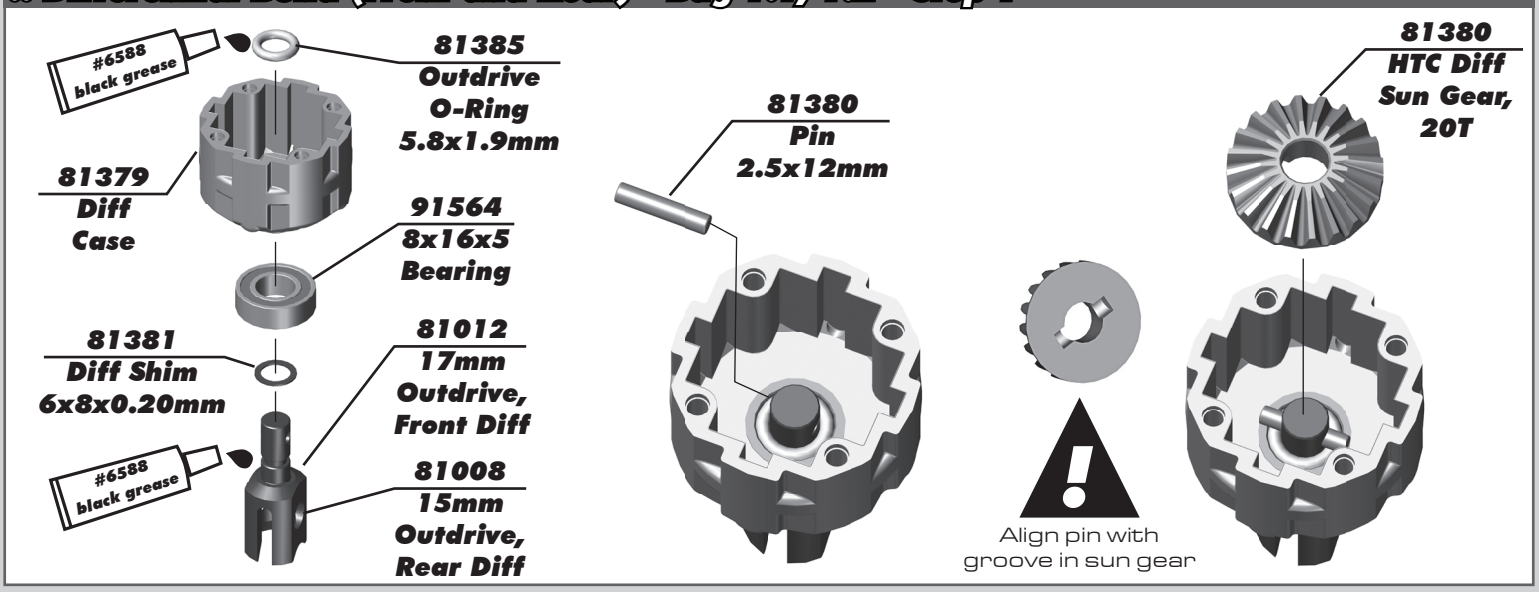

:: Differential Build (Front and Rear) - Bag 1.1, 1.2 - Step 2

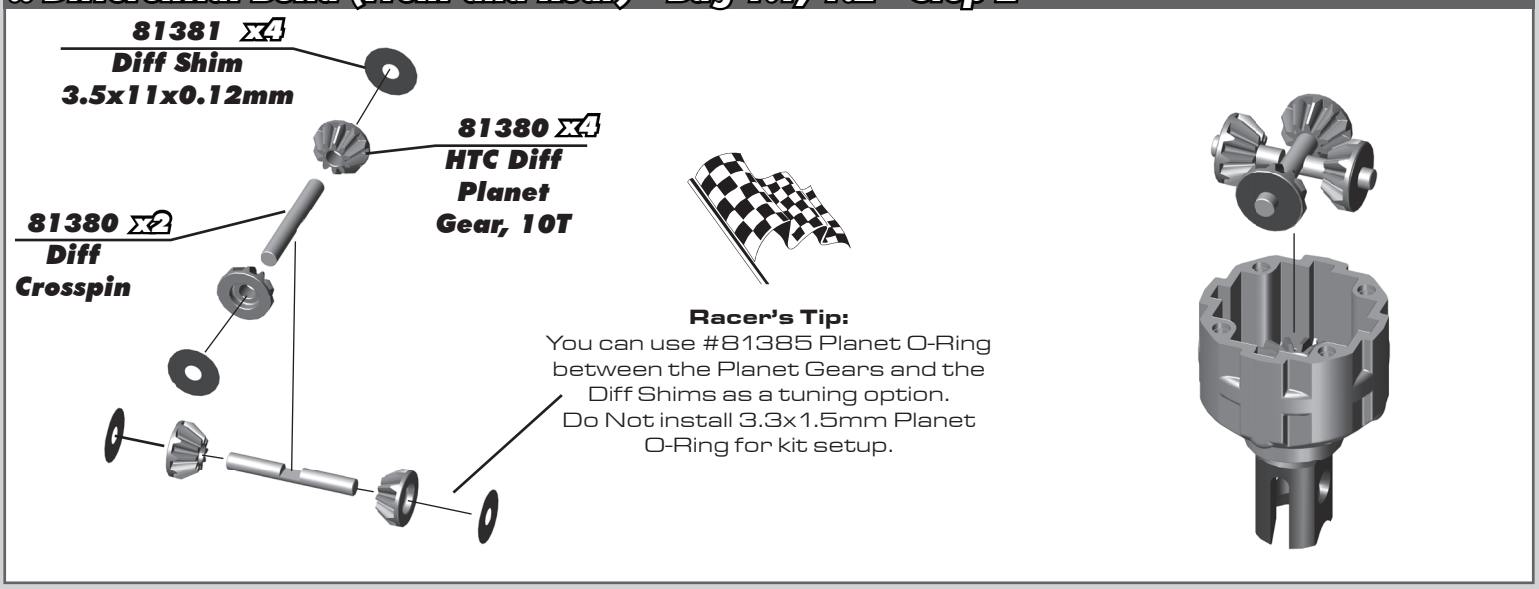

:: Differential Build (Front and Rear) - Bag 1.1, 1.2 - Step 3

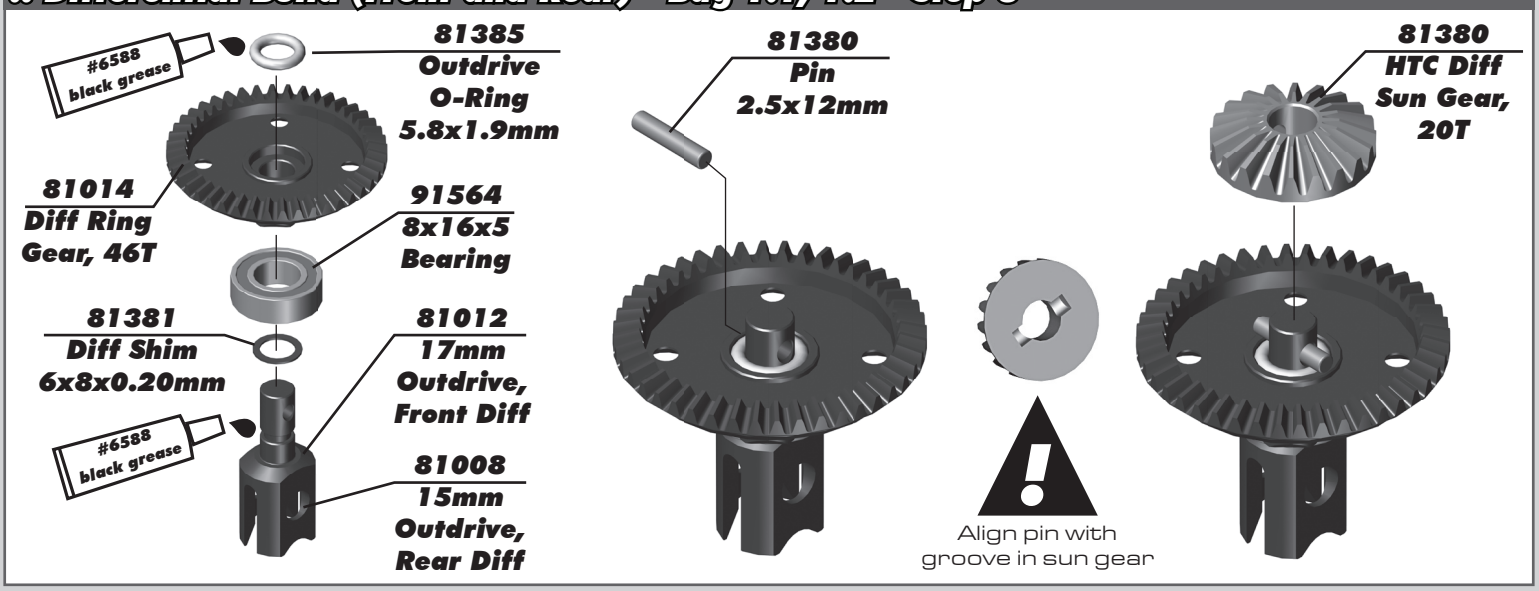

:: Differential Build (Front and Rear) - Bag 1.1, 1.2 - Step 4

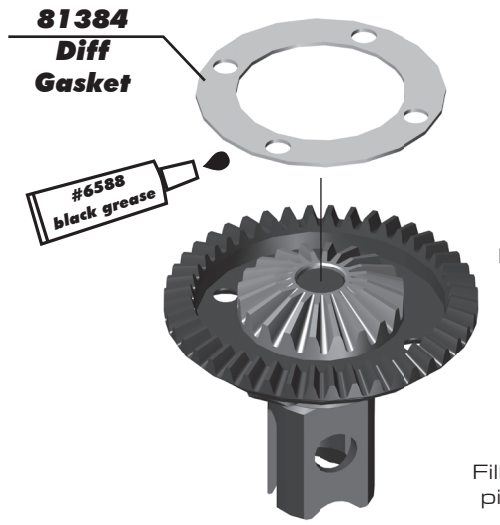

Racer's Tip:
Use black grease (#6588) to coat the Diff Gasket before installation!

Racer's Tip:
Fill diff above the cross pins, below the planet gears as shown.

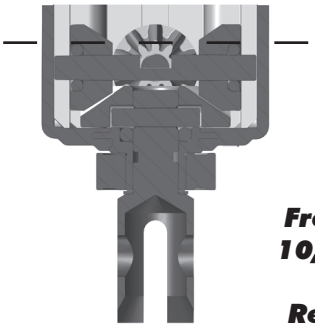

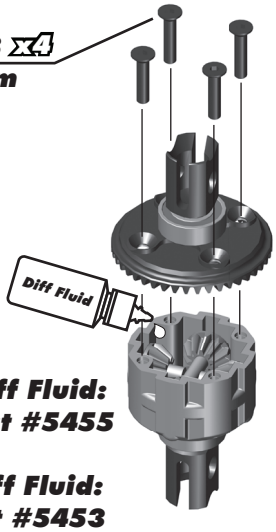

Front Diff Fluid:
10,000cst #5455

Rear Diff Fluid:
5,000cst #5453

:: Differential Build (Center) - Bag 1.1, 1.2 - Step 5

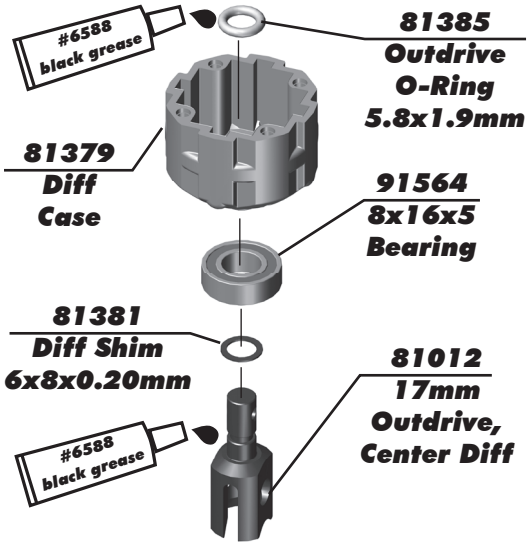

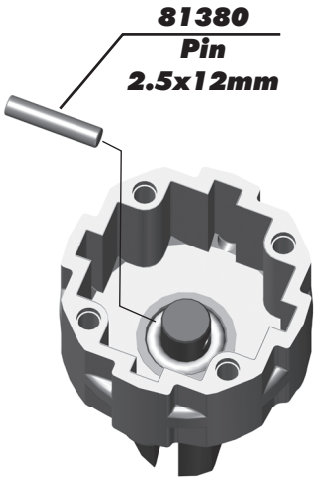

Align pin with groove in sun gear

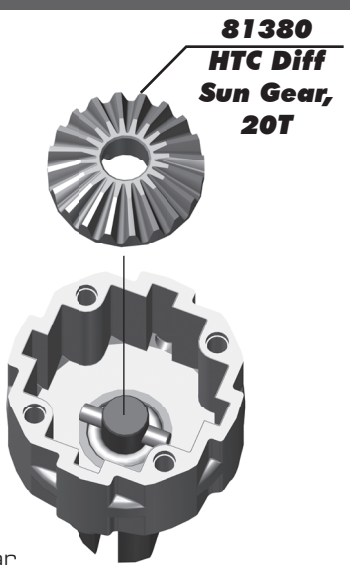

:: Differential Build (Center) - Bag 1.1, 1.2 - Step 6

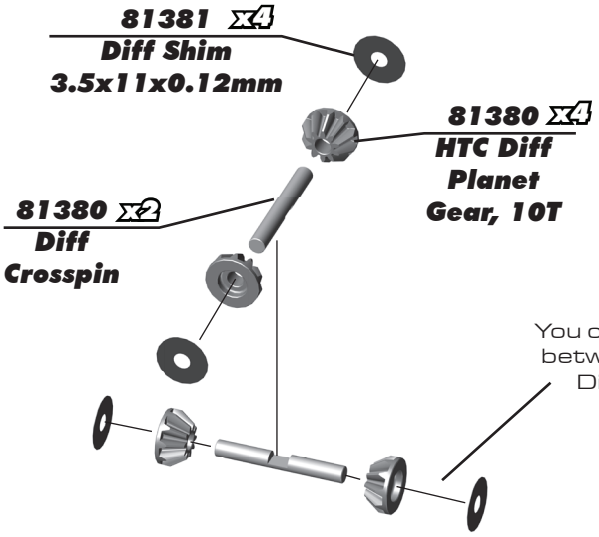

Racer's Tip:
You can use #81385 Planet O-Ring between the Planet Gears and the Diff Shims as a tuning option.

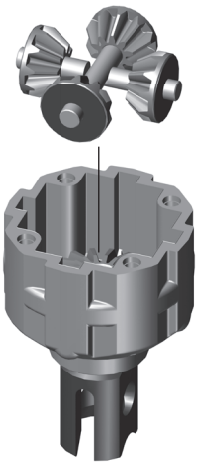

:: Differential Build (Center) - Bag 1.1, 1.2 - Step 7

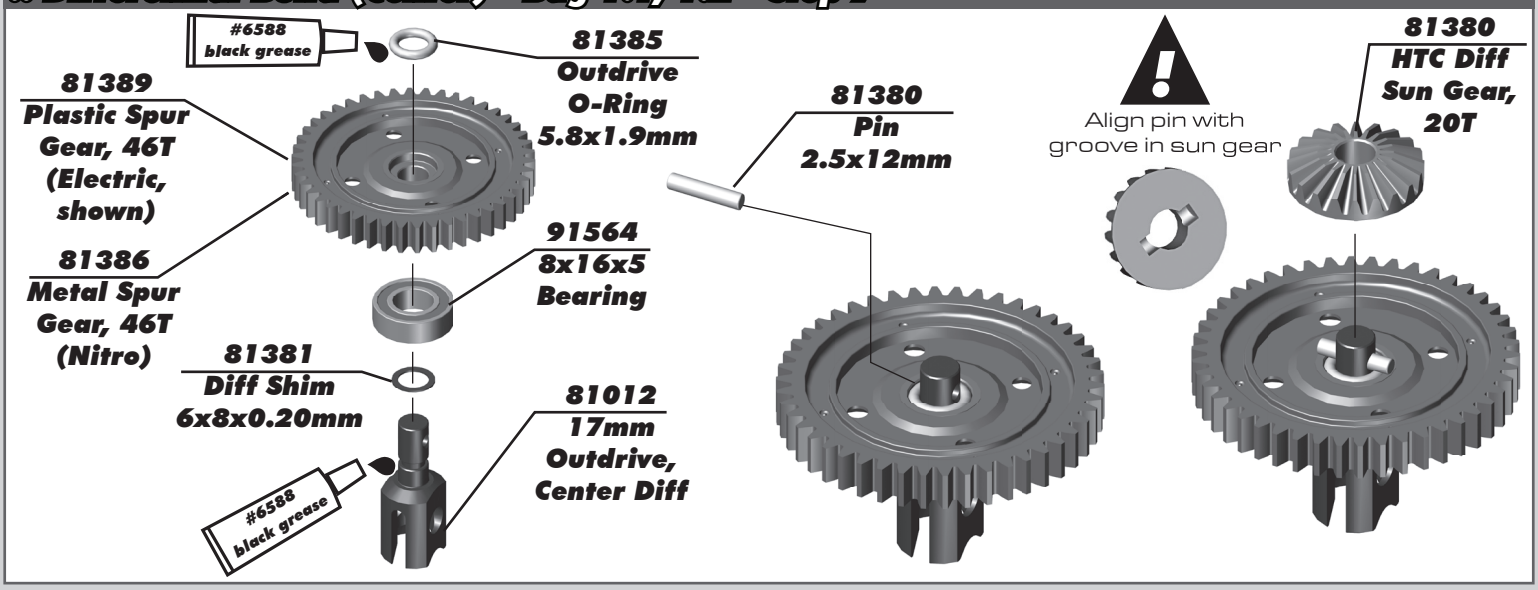

:: Differential Build (Center) - Bag 1.1, 1.2 - Step 8

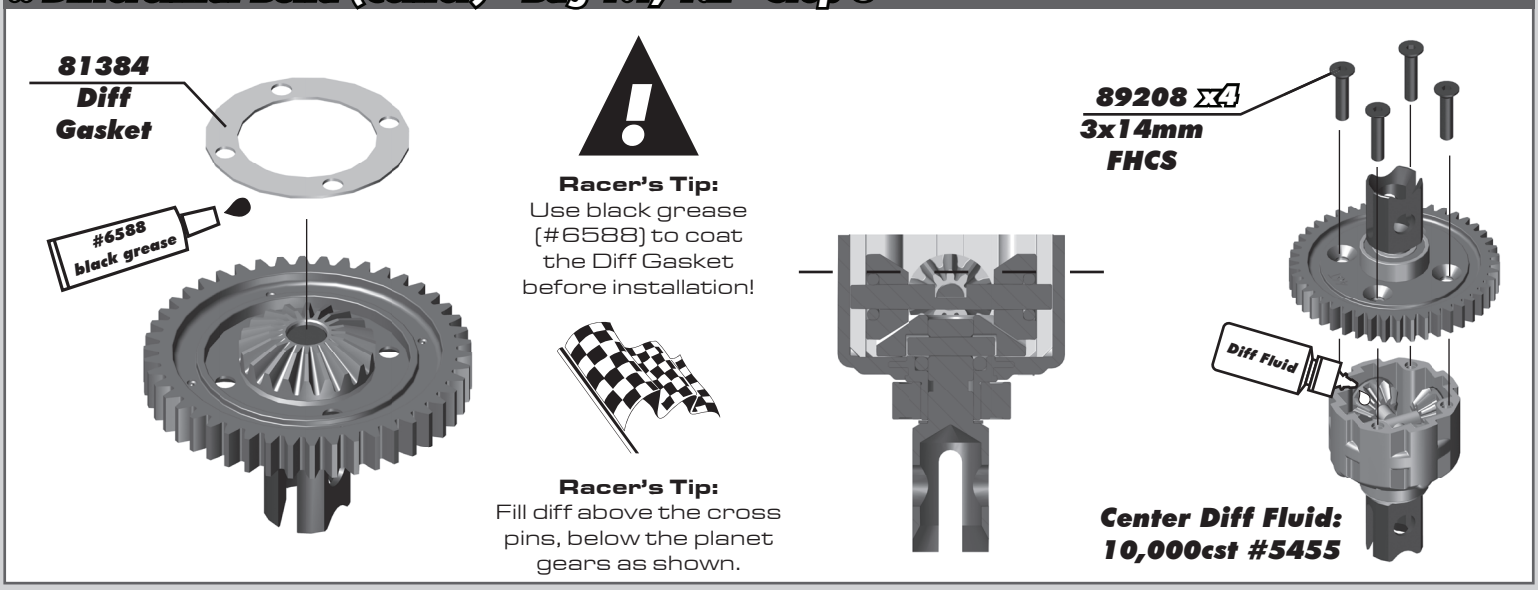

:: Steering / Chassis Build - Bag 2.1, 2.2 - Step 1

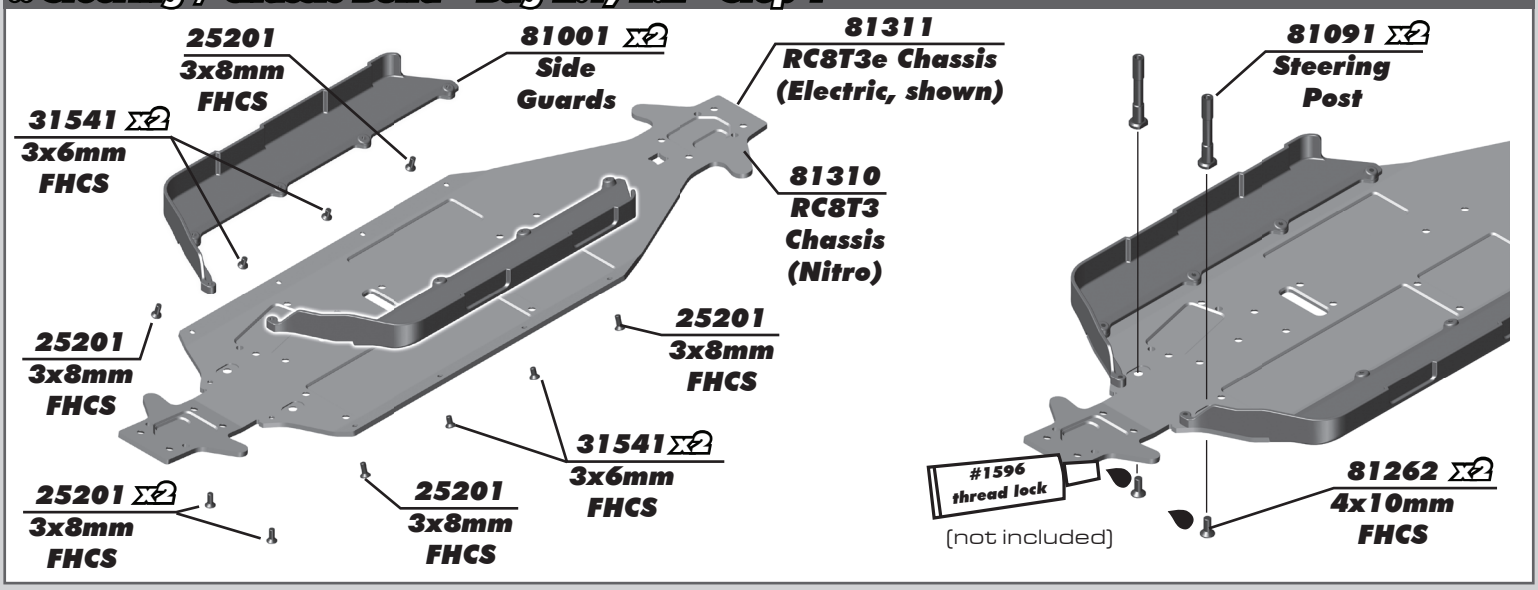

:: Steering / Chassis Build - Bag 2.1, 2.2 - Step 2

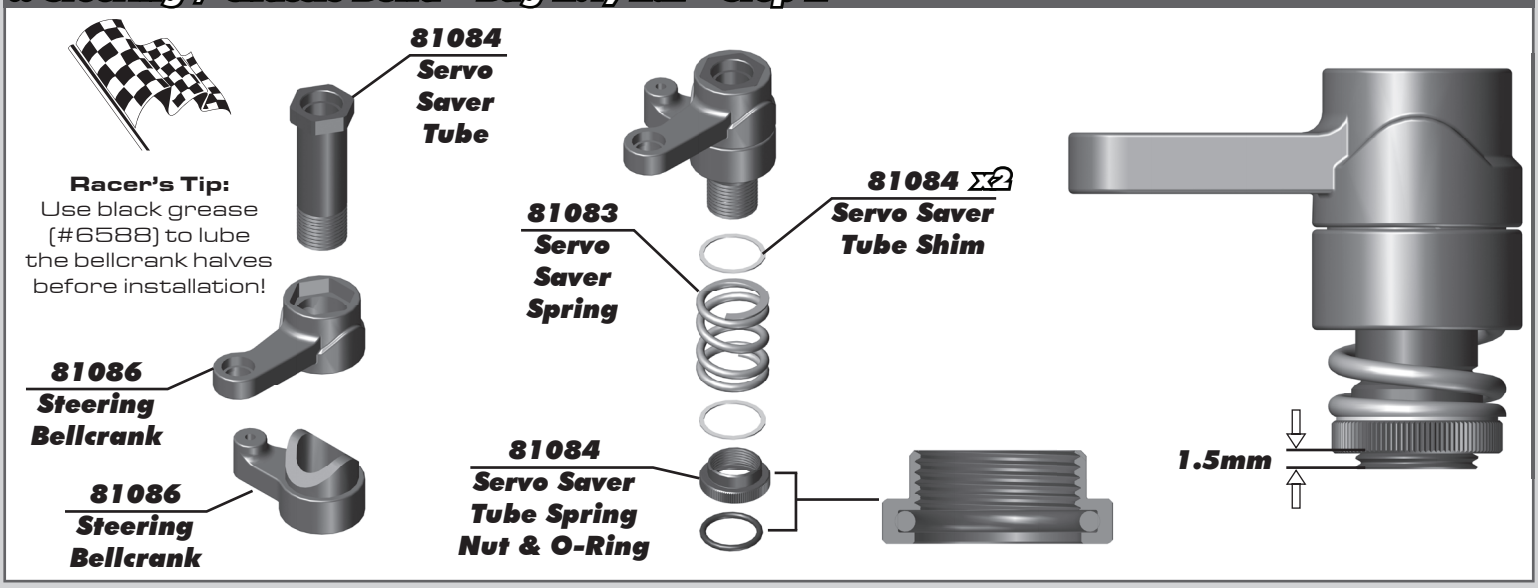

:: Steering / Chassis Build - Bag 2.1, 2.2 - Step 3

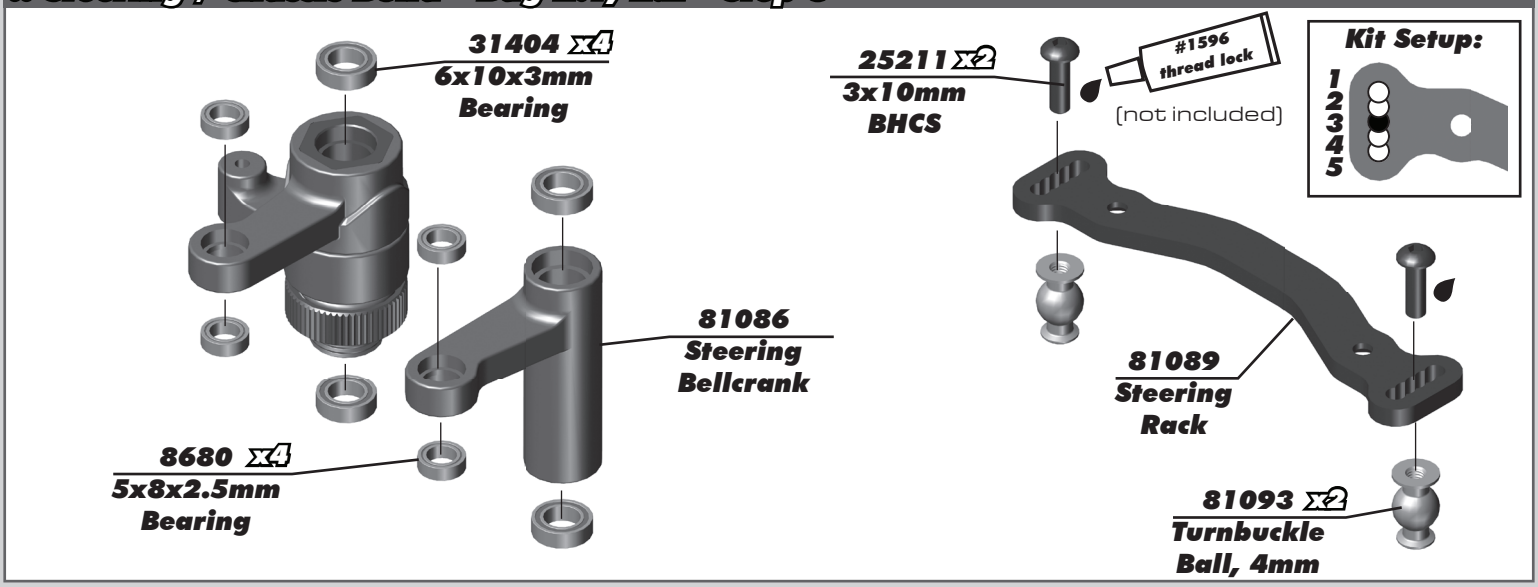

:: Steering / Chassis Build - Bag 2.1, 2.2 - Step 4

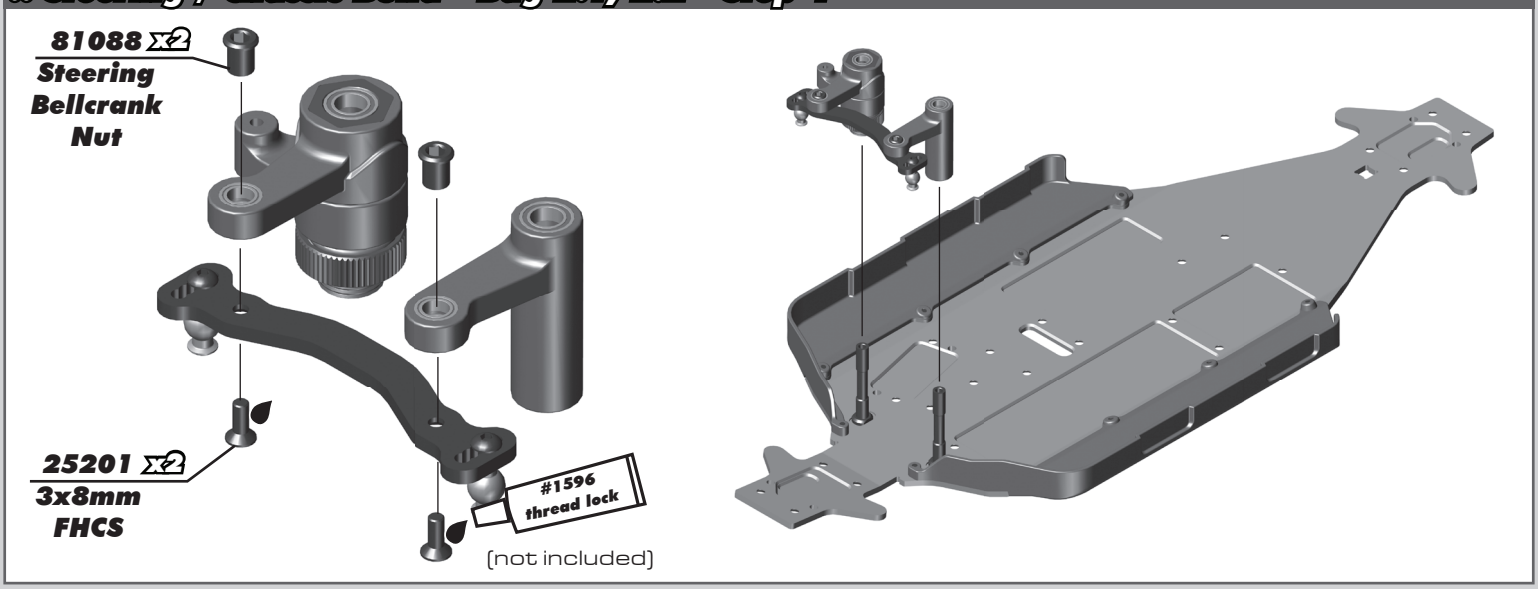

:: Front Gearbox Build - Bag 3.1, 3.2 - Step 1

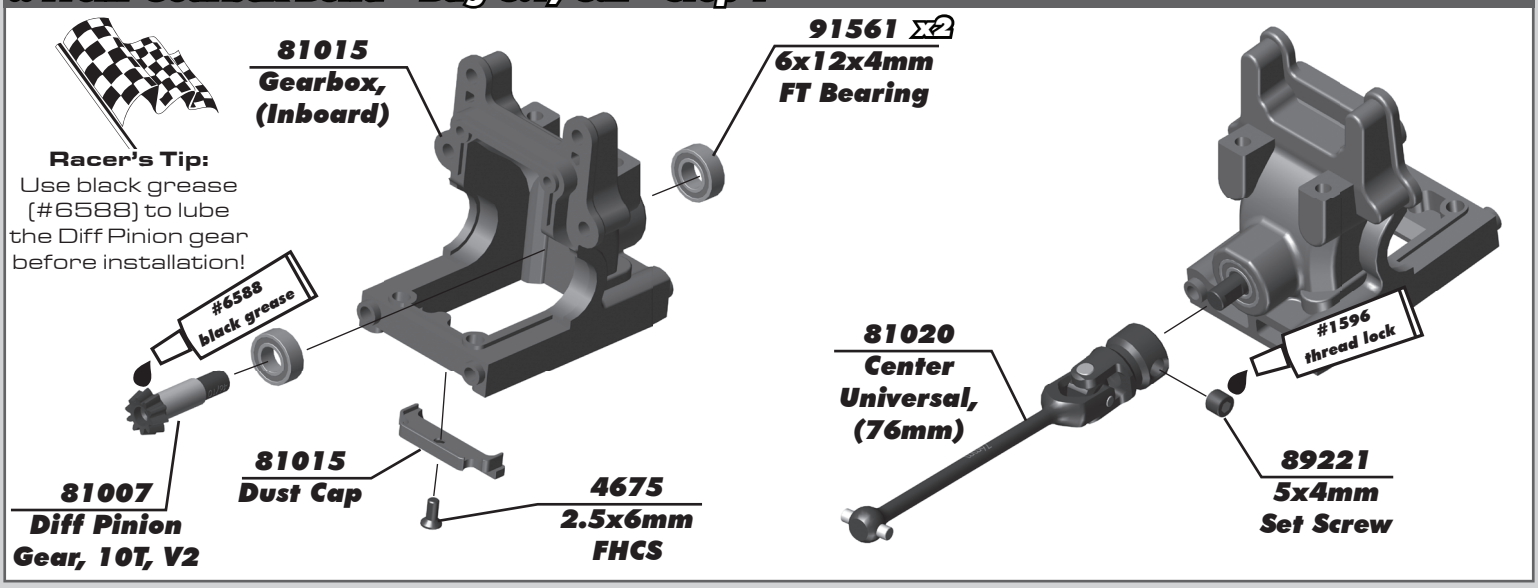

:: Front Gearbox Build - Bag 3.1, 3.2 - Step 2

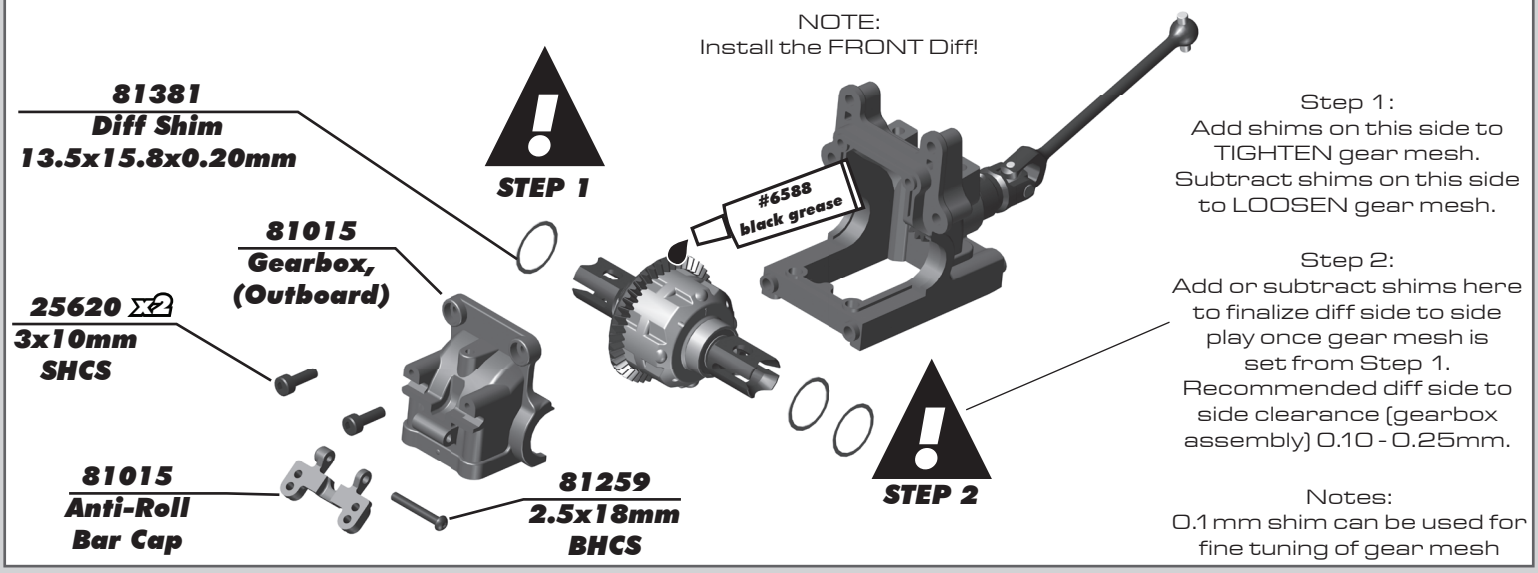

:: Front Gearbox Build - Bag 3.1, 3.2 - Step 3

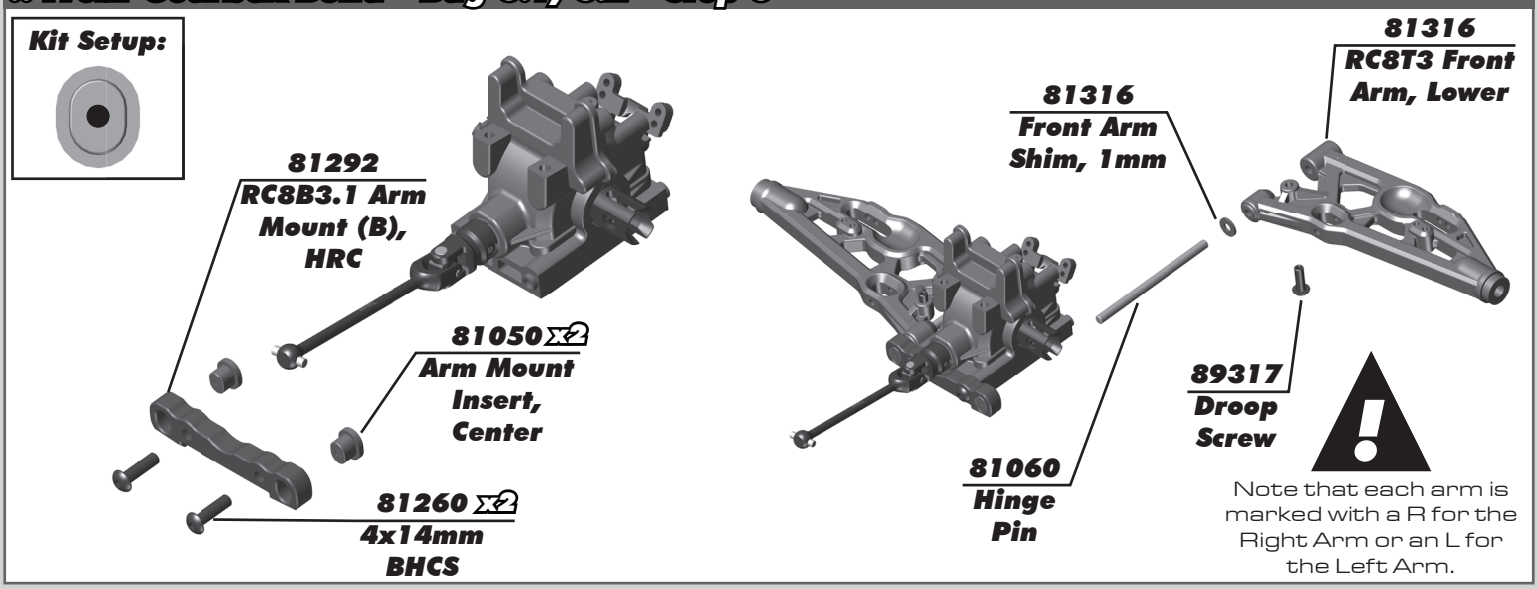

:: Front Gearbox Build - Bag 3.1, 3.2 - Step 4

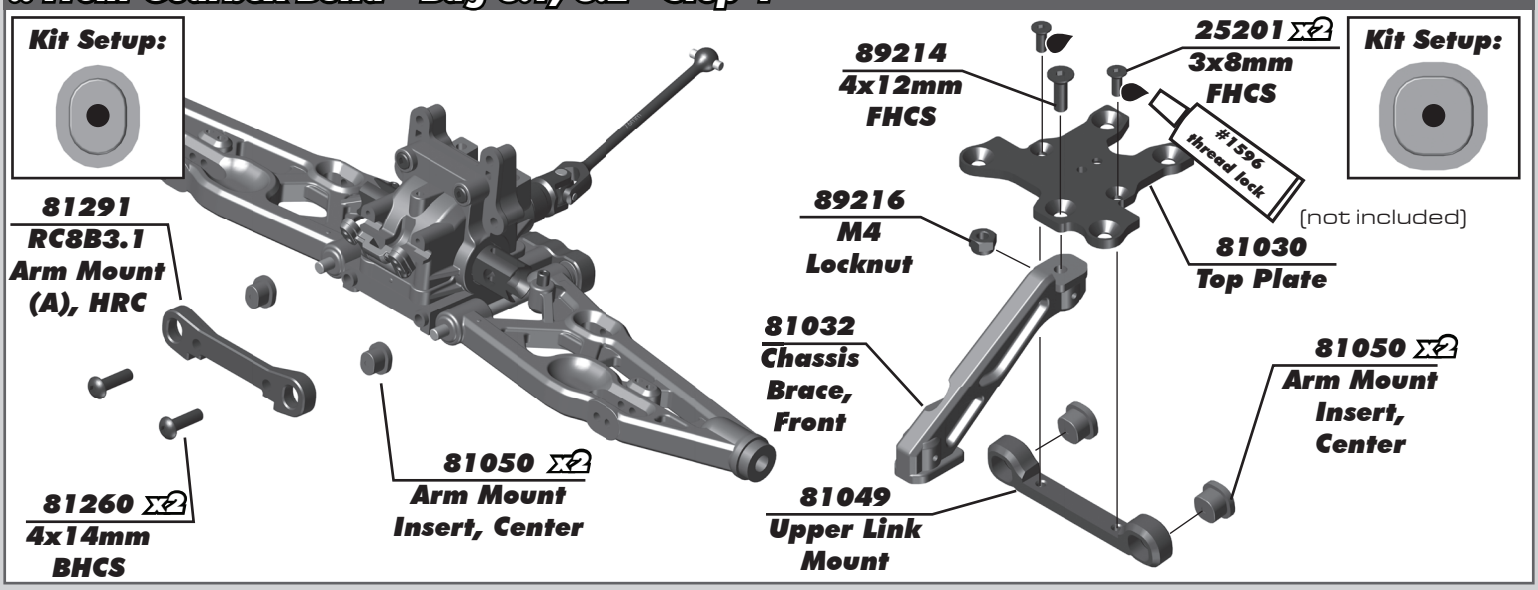

:: Front Gearbox Build - Bag 3.1, 3.2 - Step 5

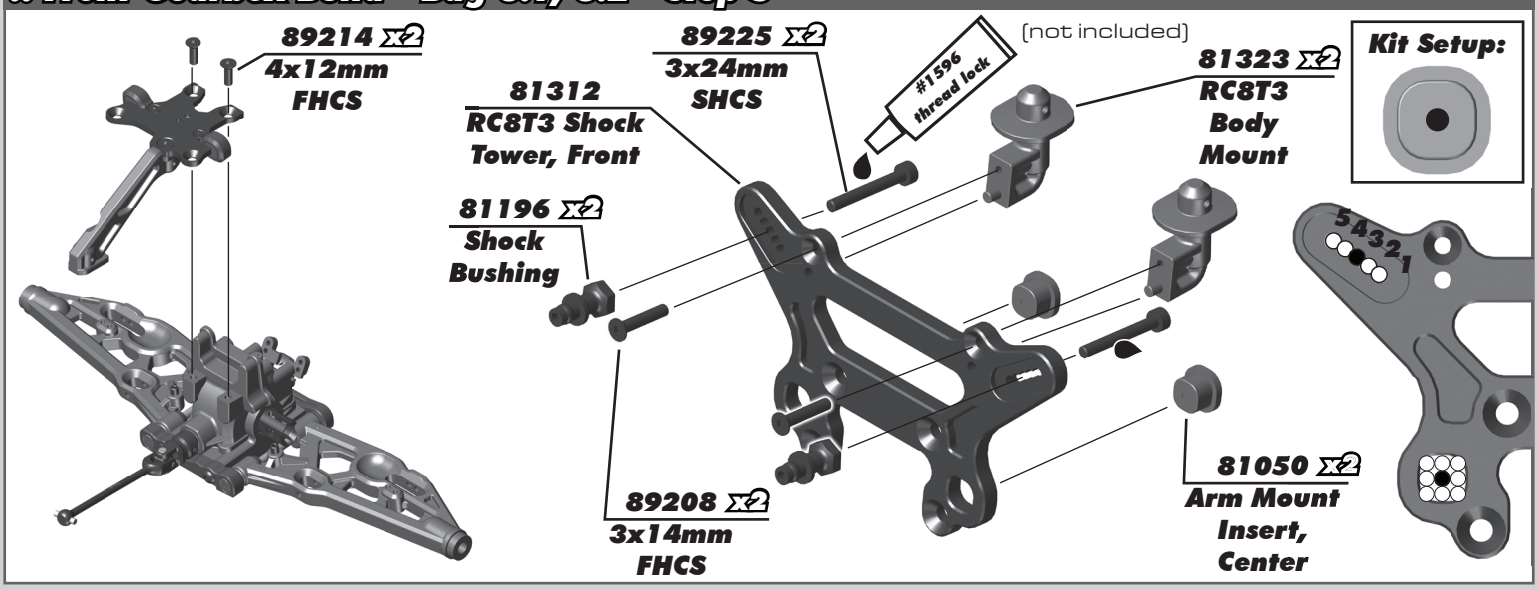

:: Front Gearbox Build - Bag 3.1, 3.2 - Step 6

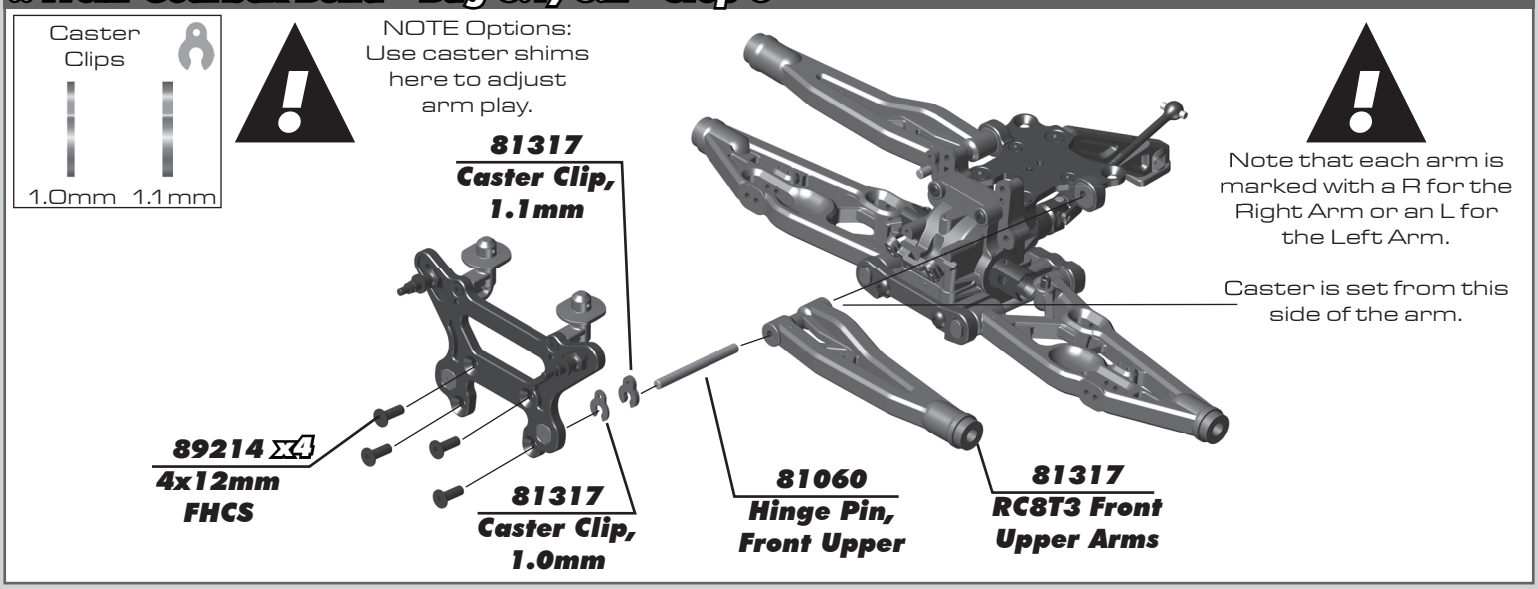

:: Front Uprights Build - Bag 4.1, 4.2 - Step 1

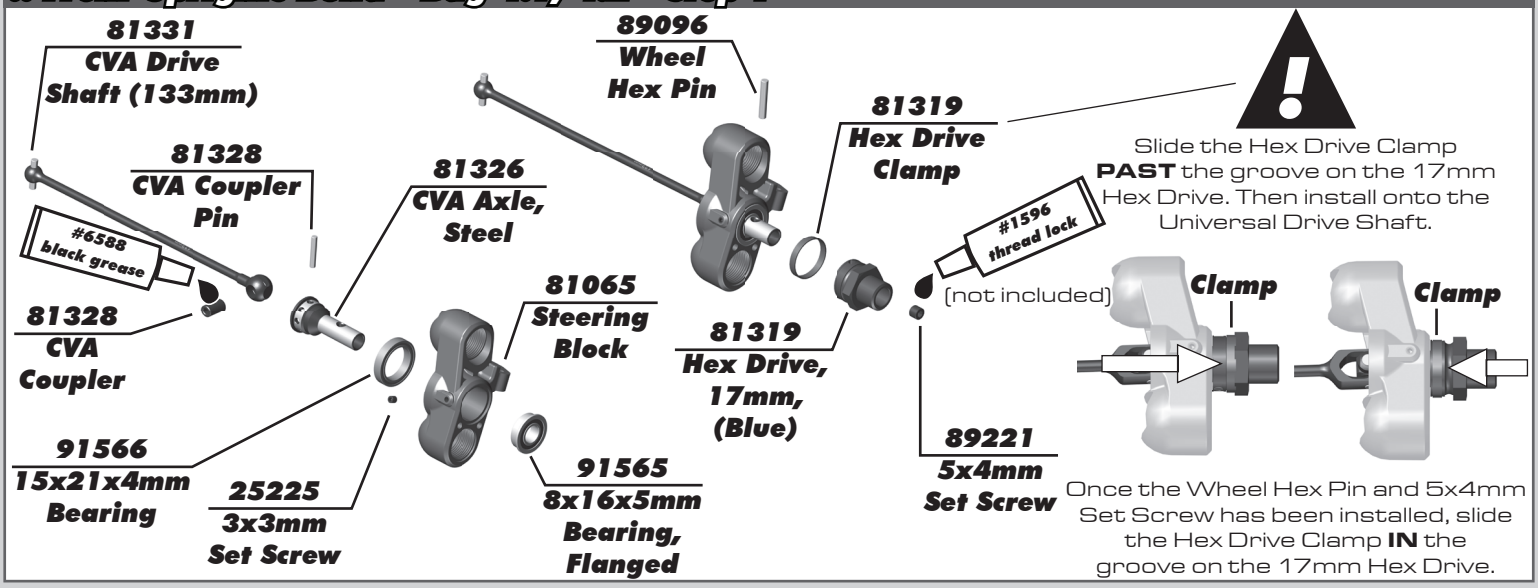

:: Front Uprights Build - Bag 4.1, 4.2 - Step 2

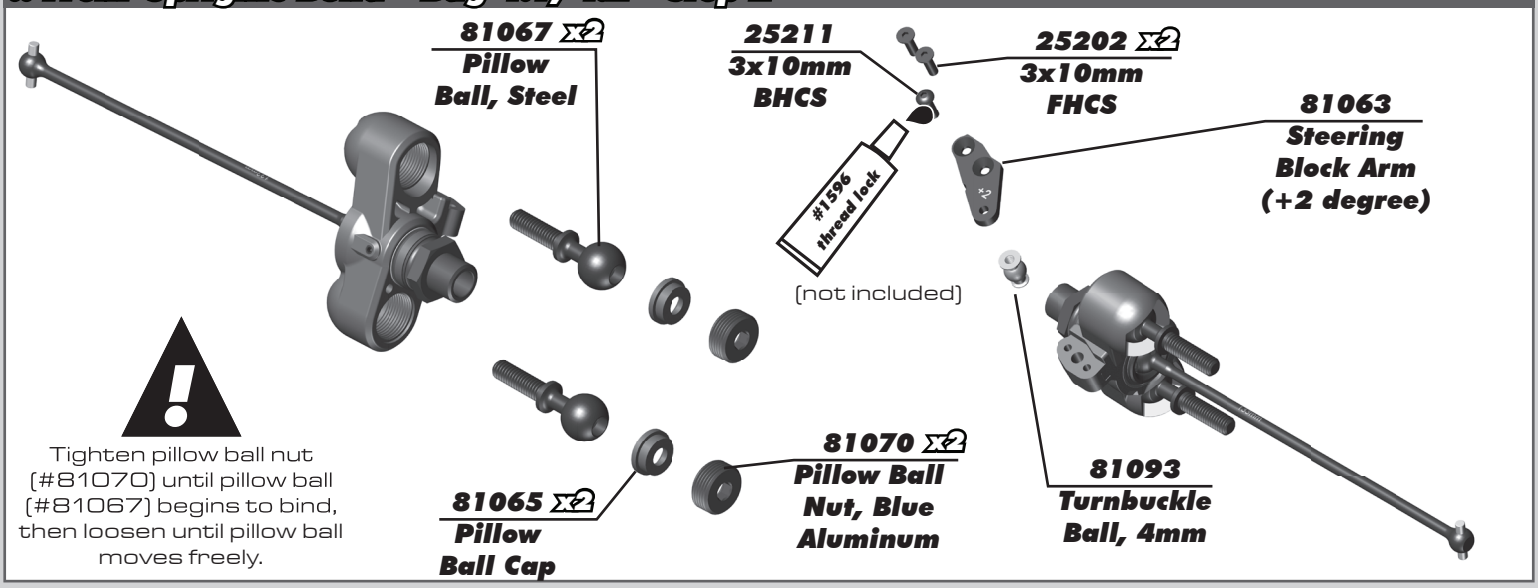

:: Front Uprights Build - Bag 4.1, 4.2 - Step 3

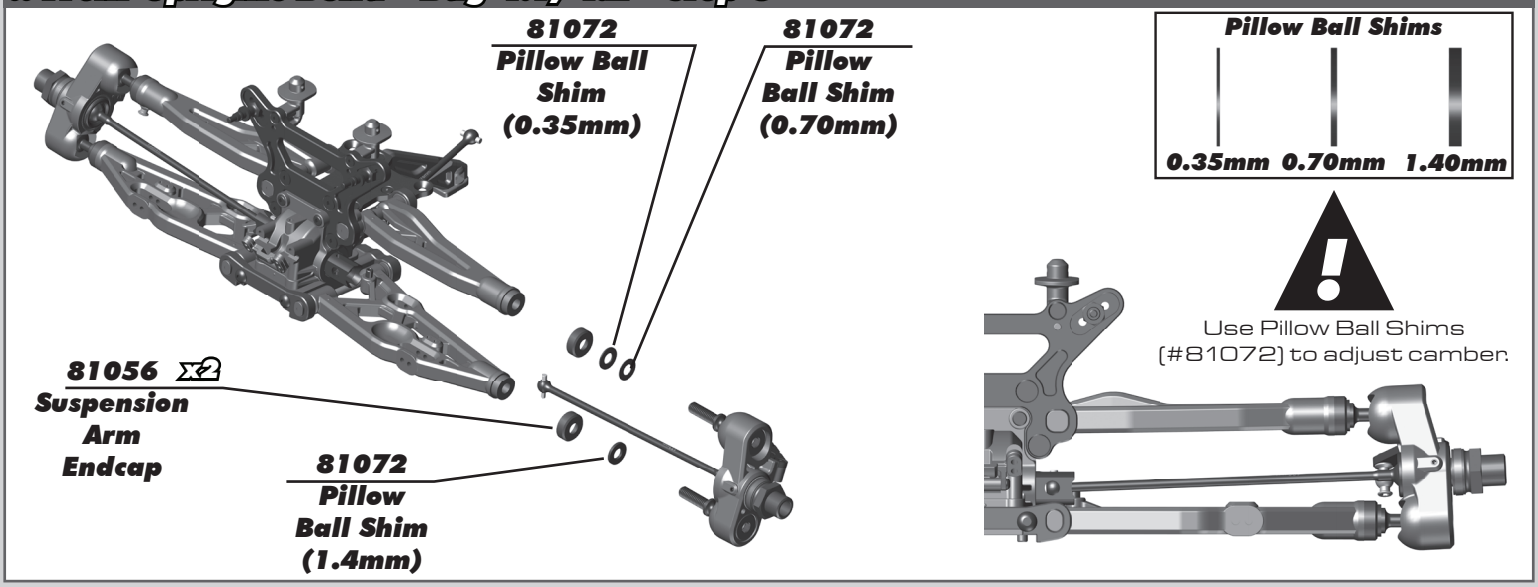

:: Front Uprights Build - Bag 4.1, 4.2 - Step 4

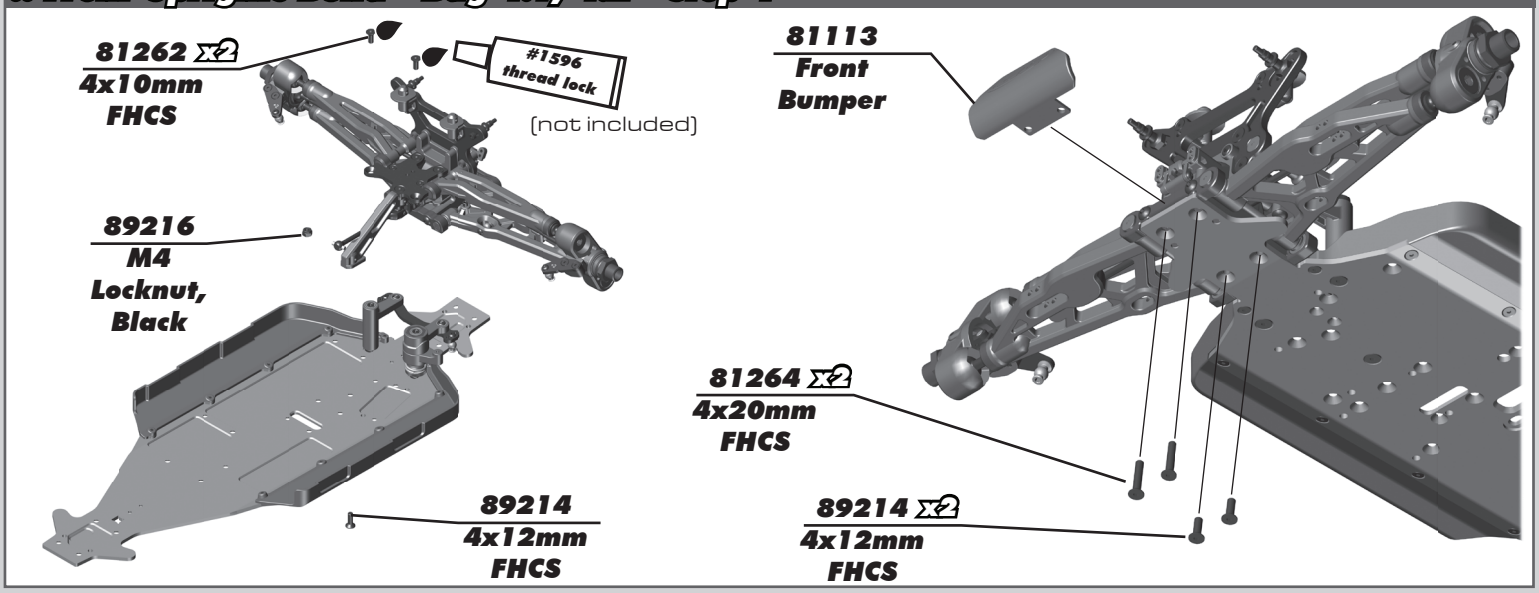

:: Rear Gearbox Build - Bag 5.1, 5.2 - Step 1

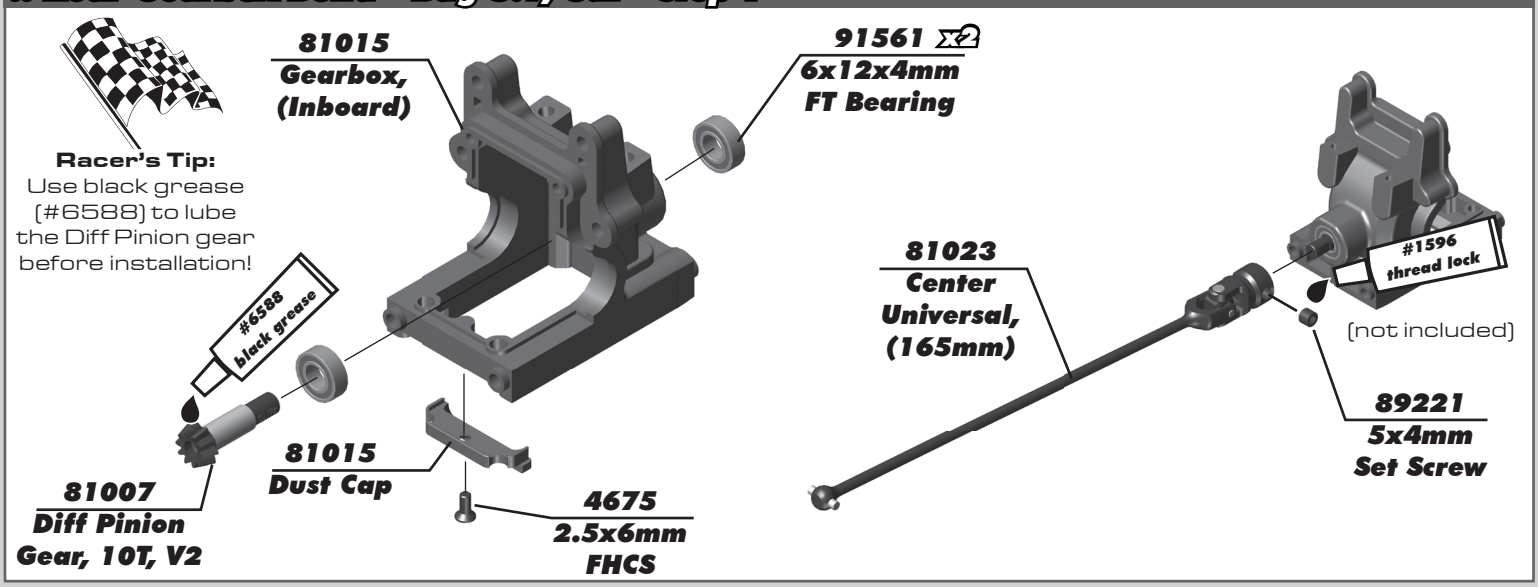

:: Rear Gearbox Build - Bag 5.1, 5.2 - Step 2

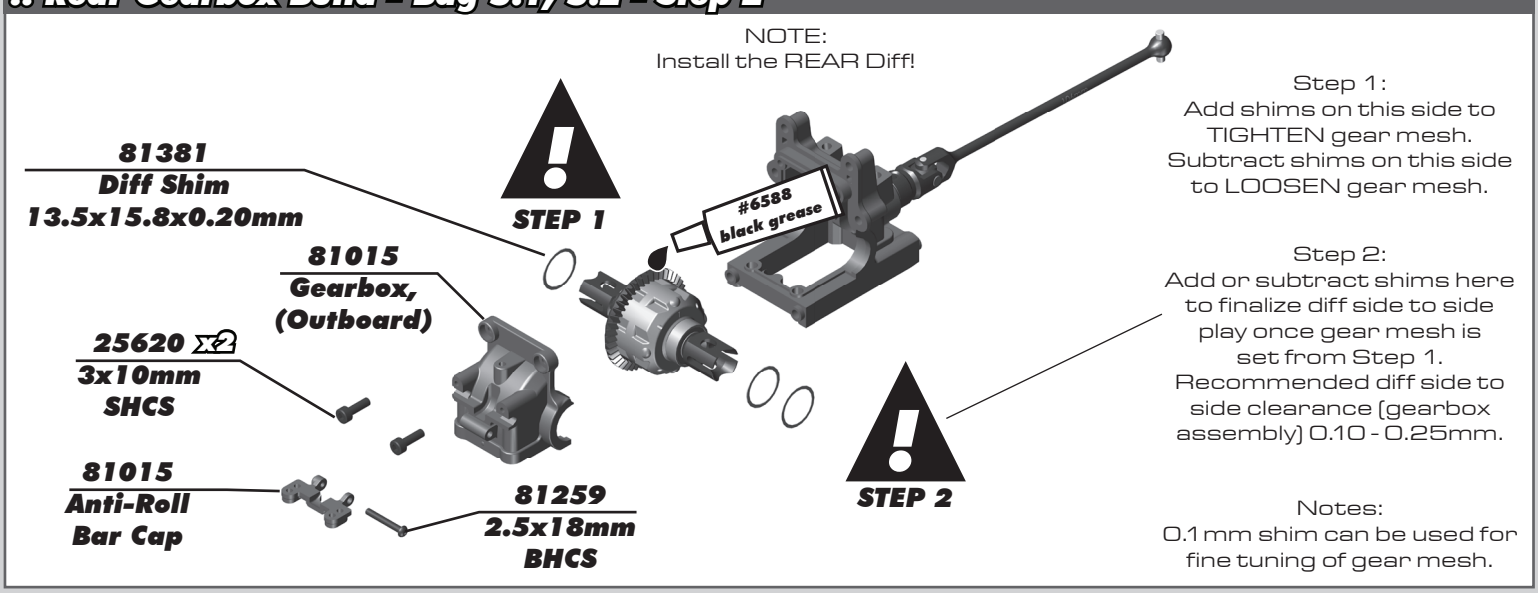

:: Rear Gearbox Build - Bag 5.1, 5.2 - Step 3

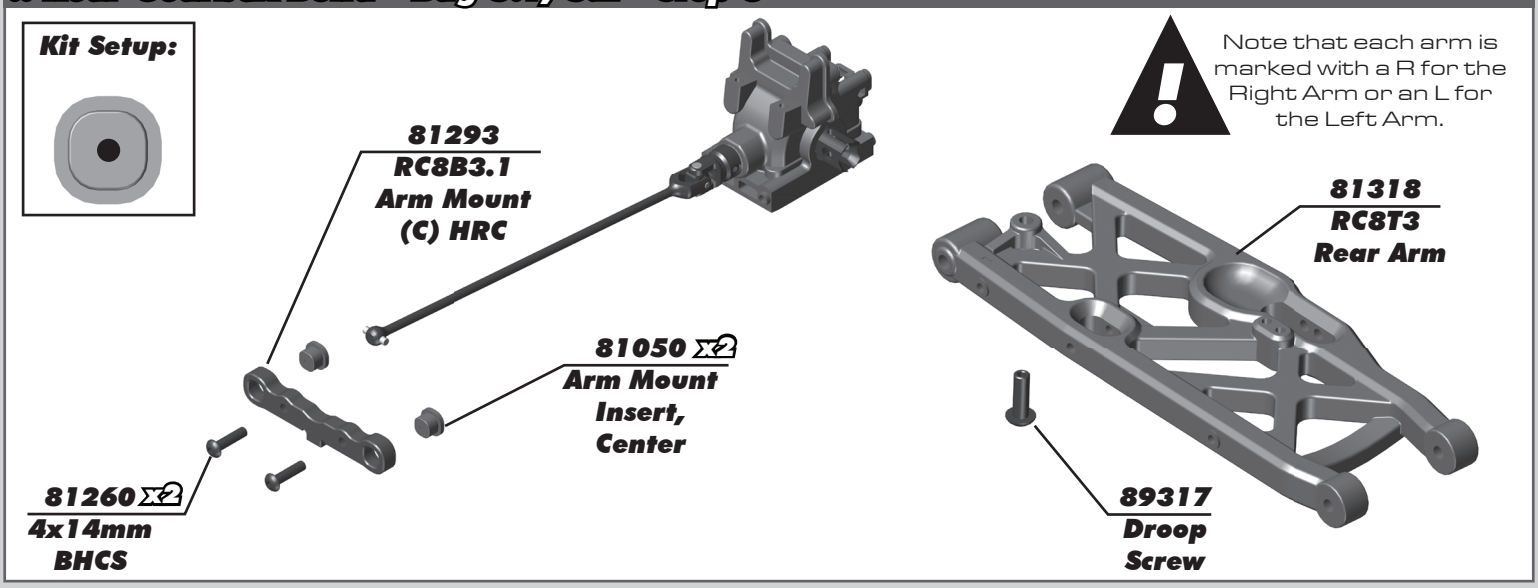

:: Rear Gearbox Build - Bag 5.1, 5.2 - Step 4

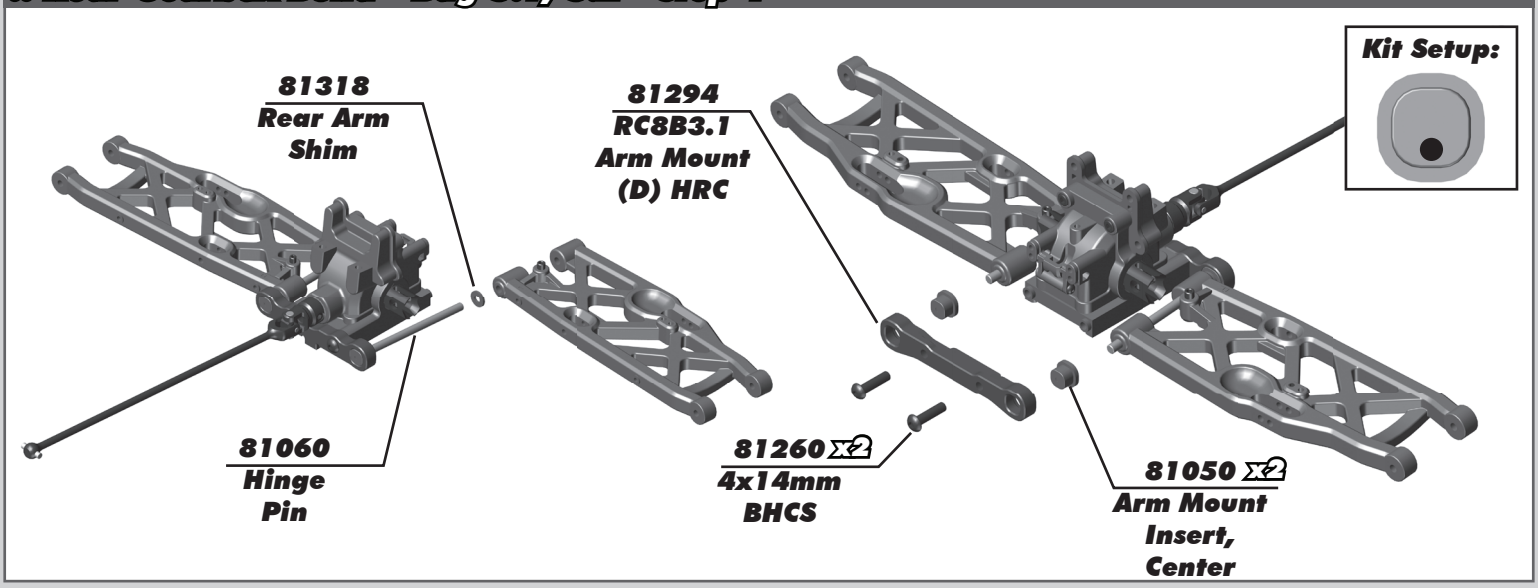

:: Rear Gearbox Build - Bag 5.1, 5.2 - Step 5

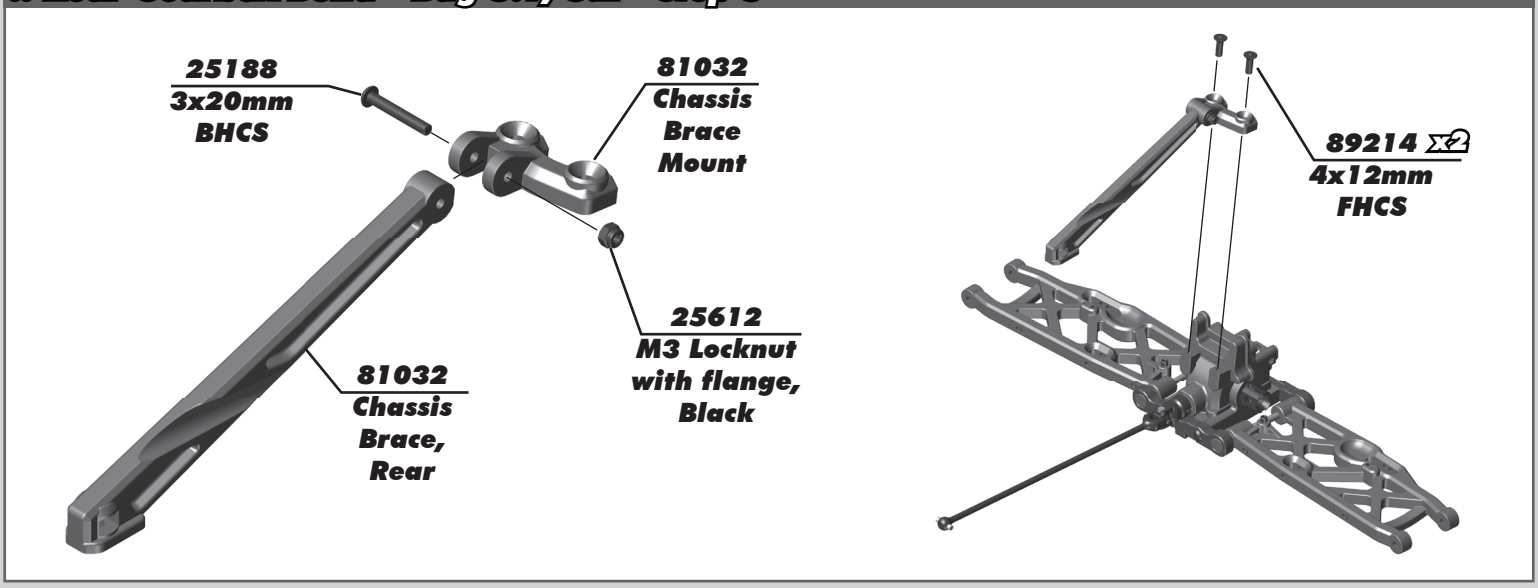

:: Rear Gearbox Build - Bag 5.1, 5.2 - Step 6

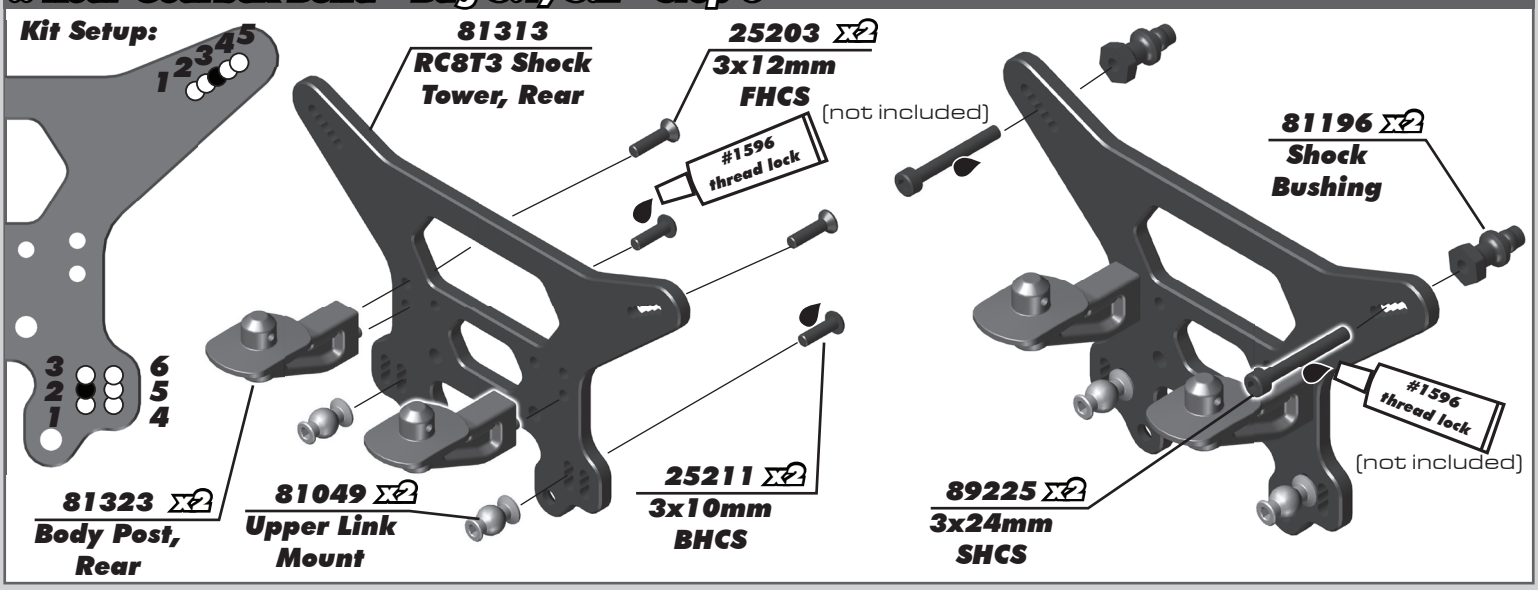

:: Rear Gearbox Build - Bag 5.1, 5.2 - Step 7

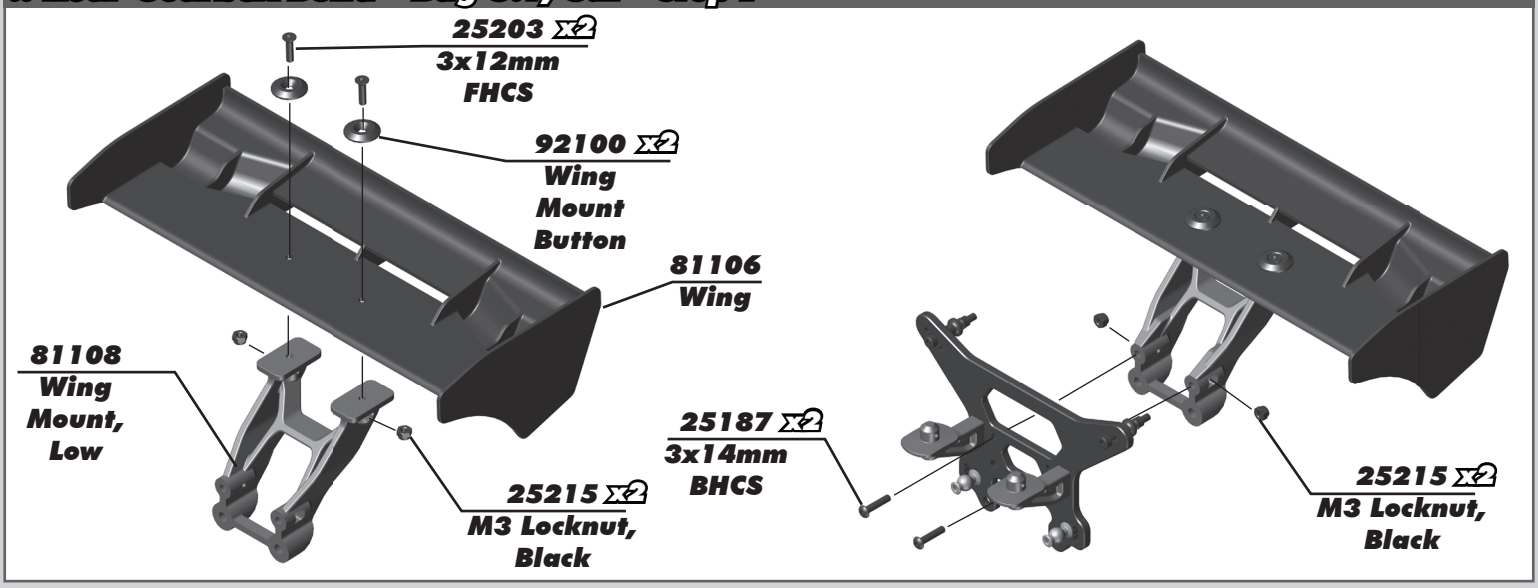

:: Rear Gearbox Build - Bag 5.1, 5.2 - Step 8

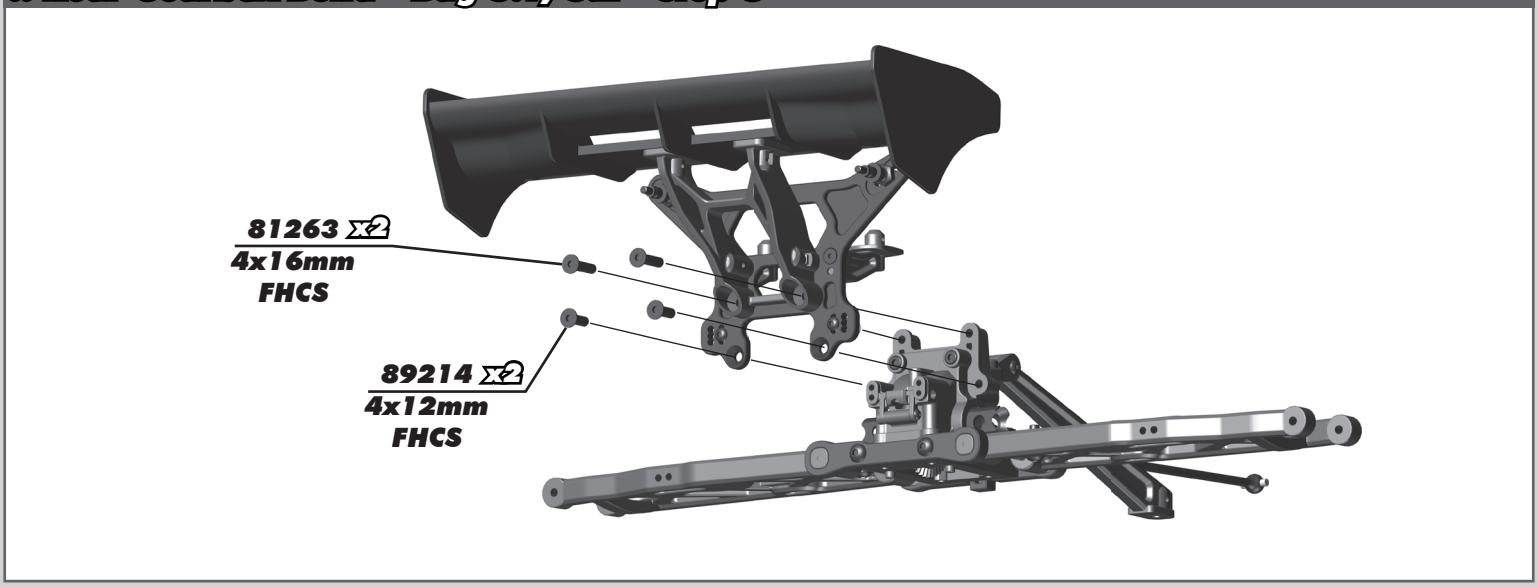

:: Rear Uprights / Turnbuckles Build - Bag 5.2, 6.1 - Step 1

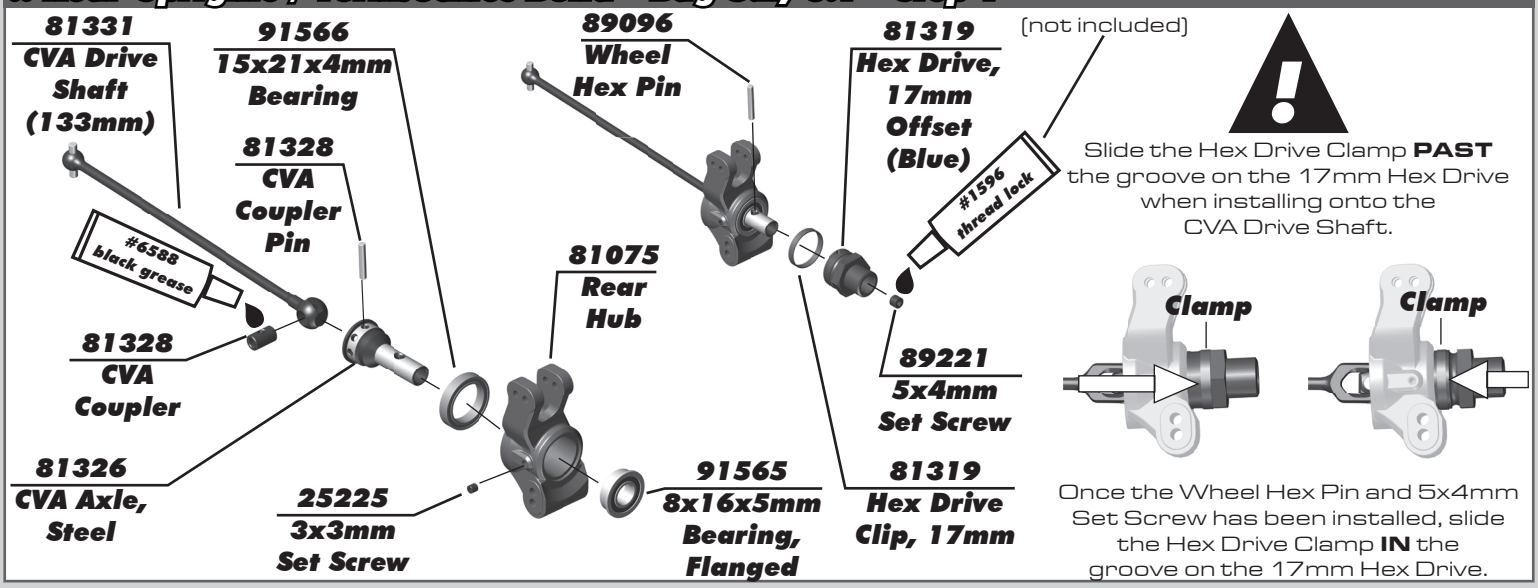

:: Rear Uprights / Turnbuckles Build - Bag 5.2, 6.1 - Step 2

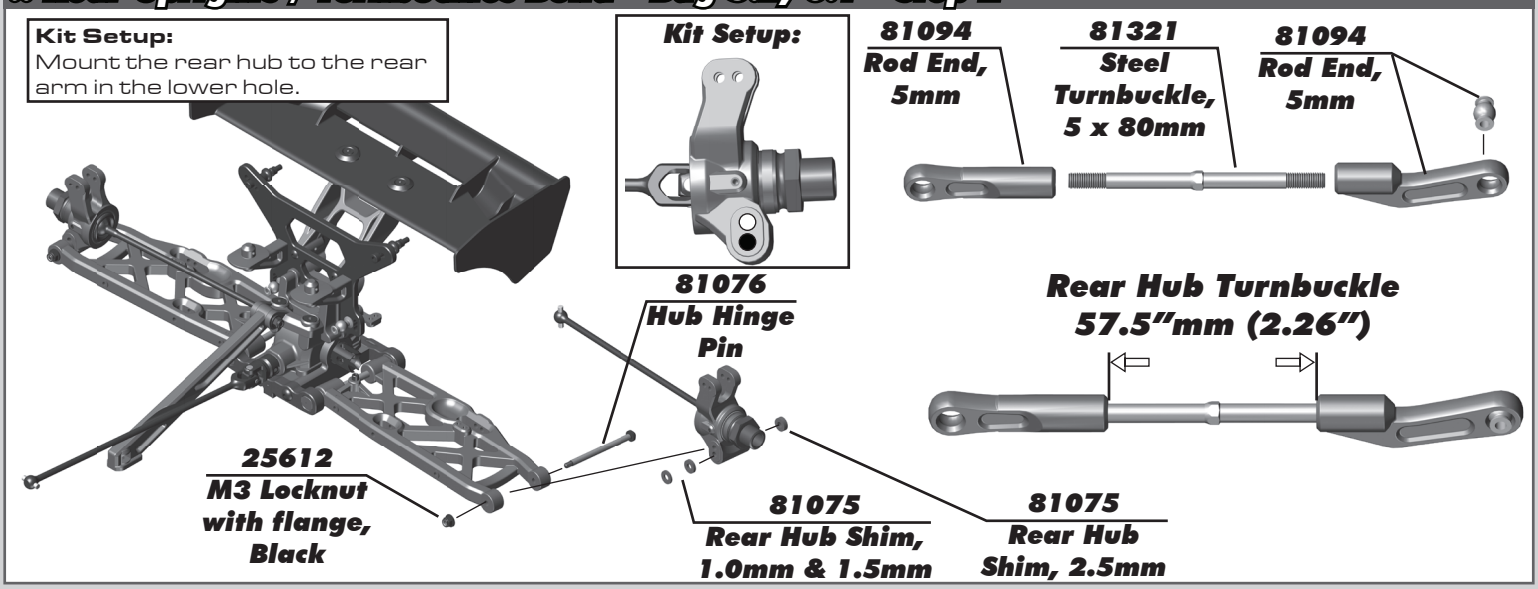

:: Rear Uprights / Turnbuckles Build - Bag 5.2, 6.1 - Step 3

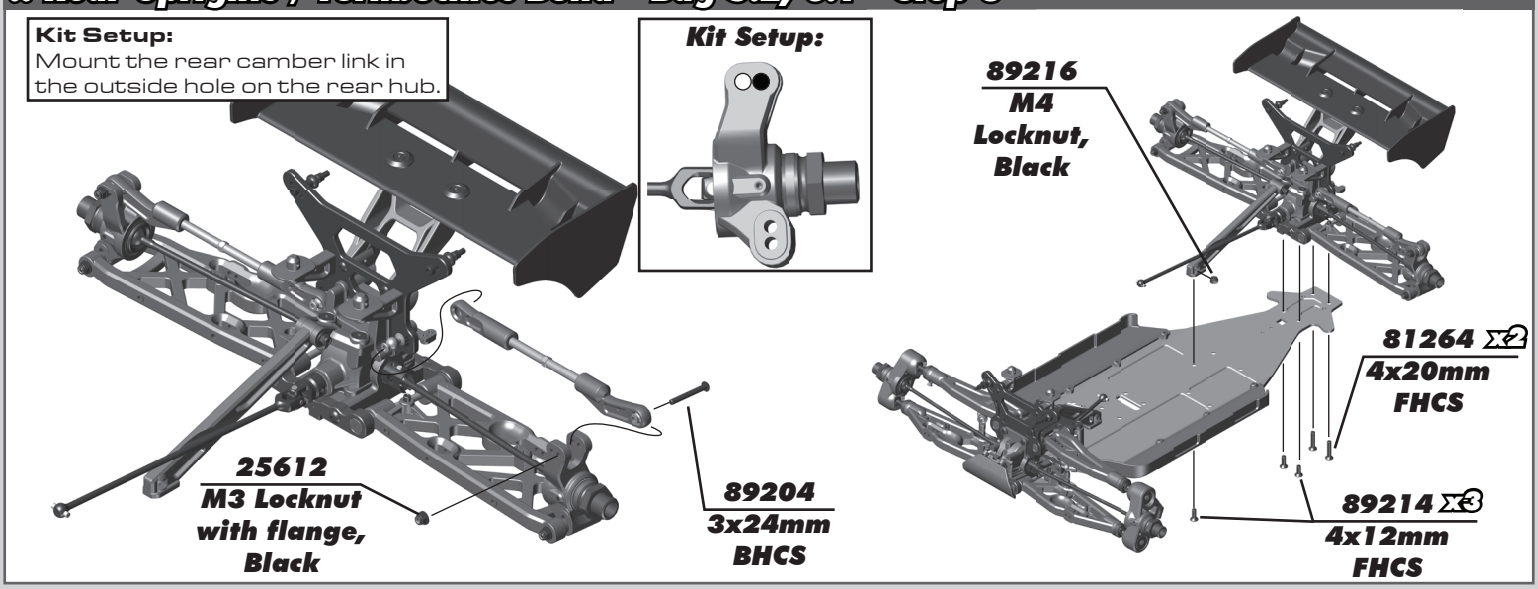

:: Rear Uprights / Turnbuckles Build - Bag 5.2, 6.1 - Step 4

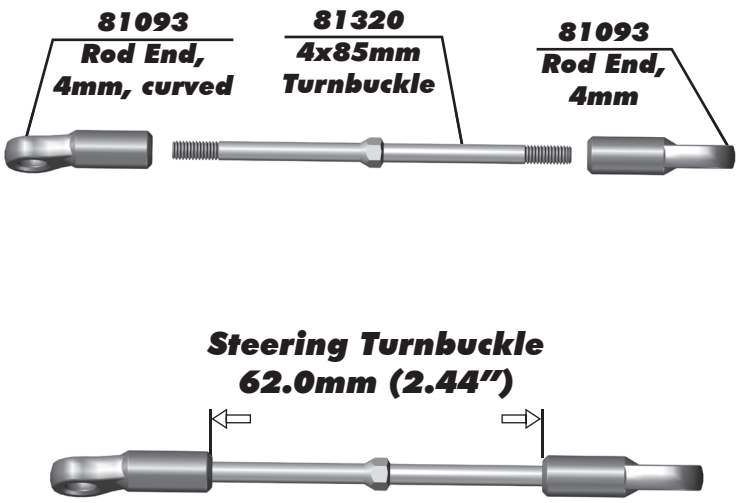

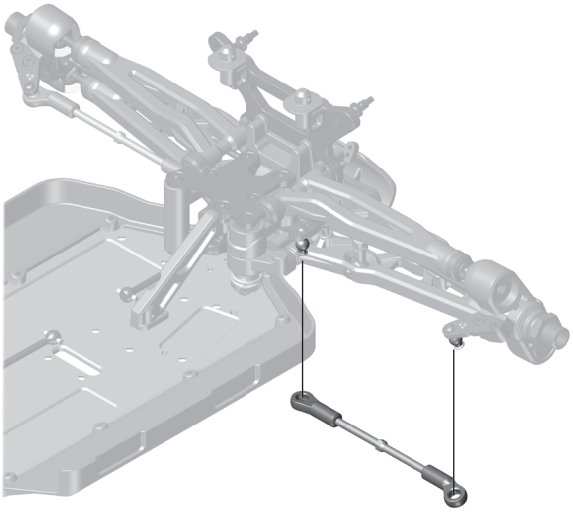

RC8T3.1e Electric Kit and RC8T3.1 Nitro Kit

If you are building an RC8T3.1e Electric kit, continue on to Center Bulkhead Build below this step.

If you are building an RC8T3.1 Nitro kit, go to page 17 to build the Anti-Roll Bars then the Shocks. Then go to page 22 to continue with the RC8T3.1 Nitro build.

:: Center Bulkhead Build - Bag 7.1, 7.2 - Step 1 (RC8T3.1e)

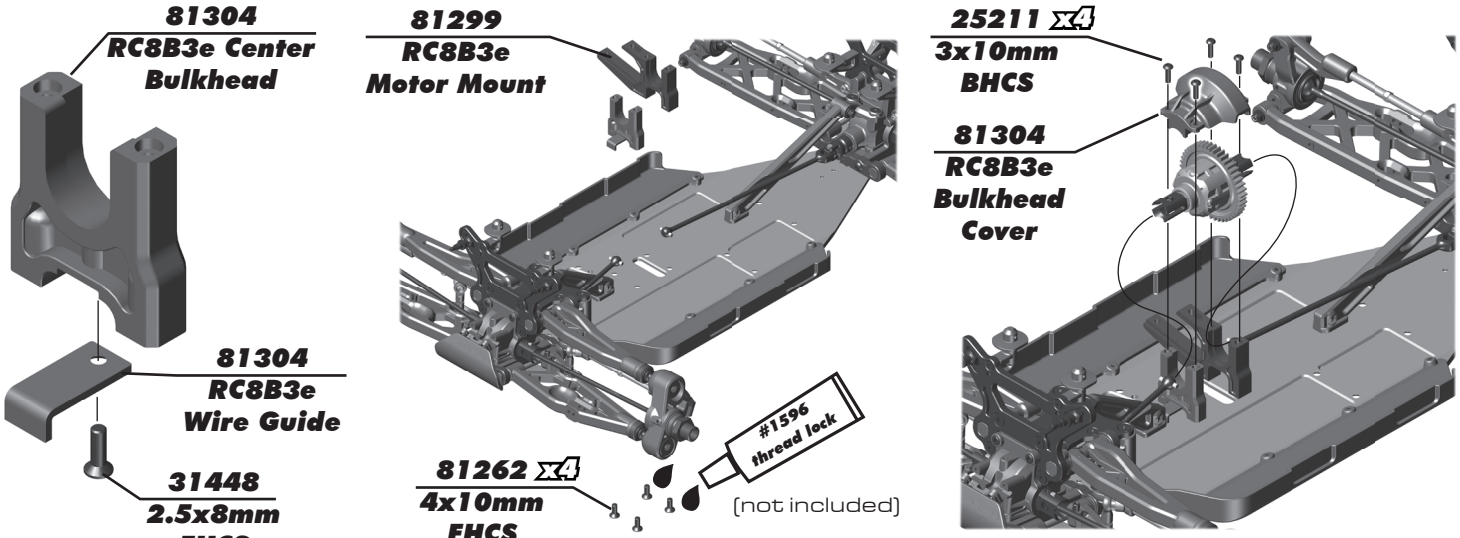

:: Center Bulkhead Build - Bag 7.1, 7.2 - Step 2 (RC8T3.1e)

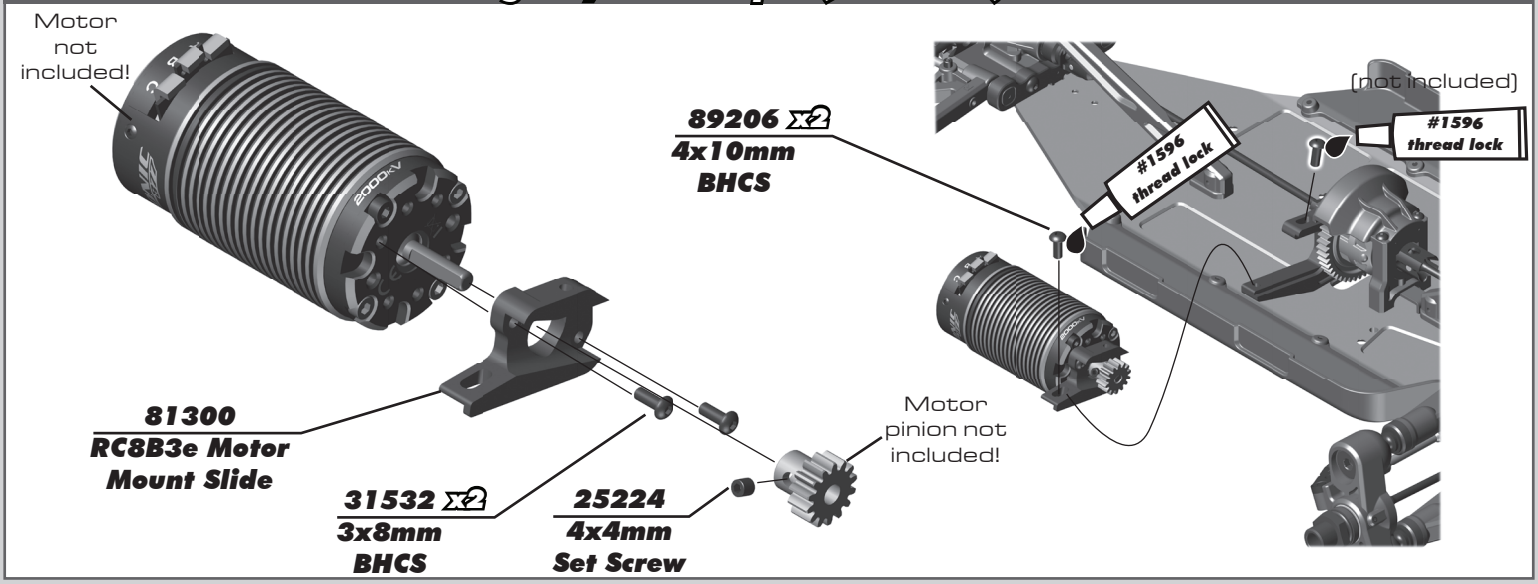

:: Anti-Roll Bars Build - Bag 8.1 - Step 1

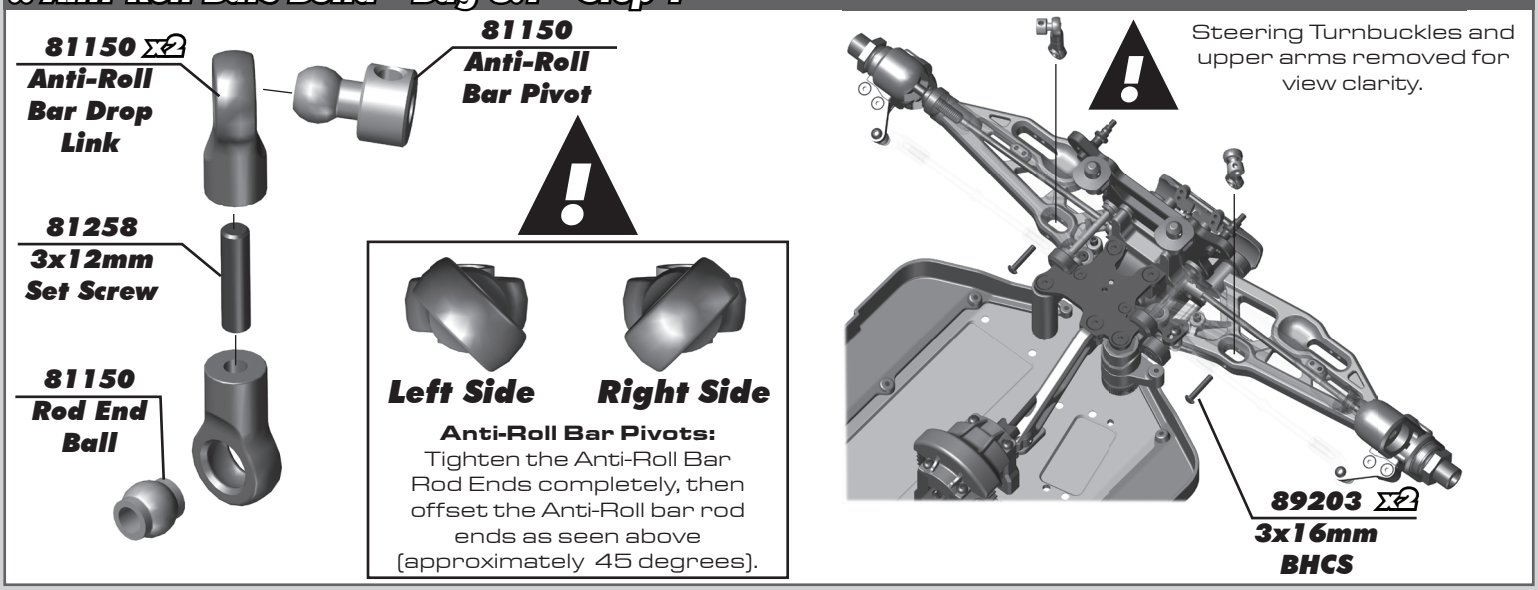

:: Anti-Roll Bars Build - Bag 8.1 - Step 2

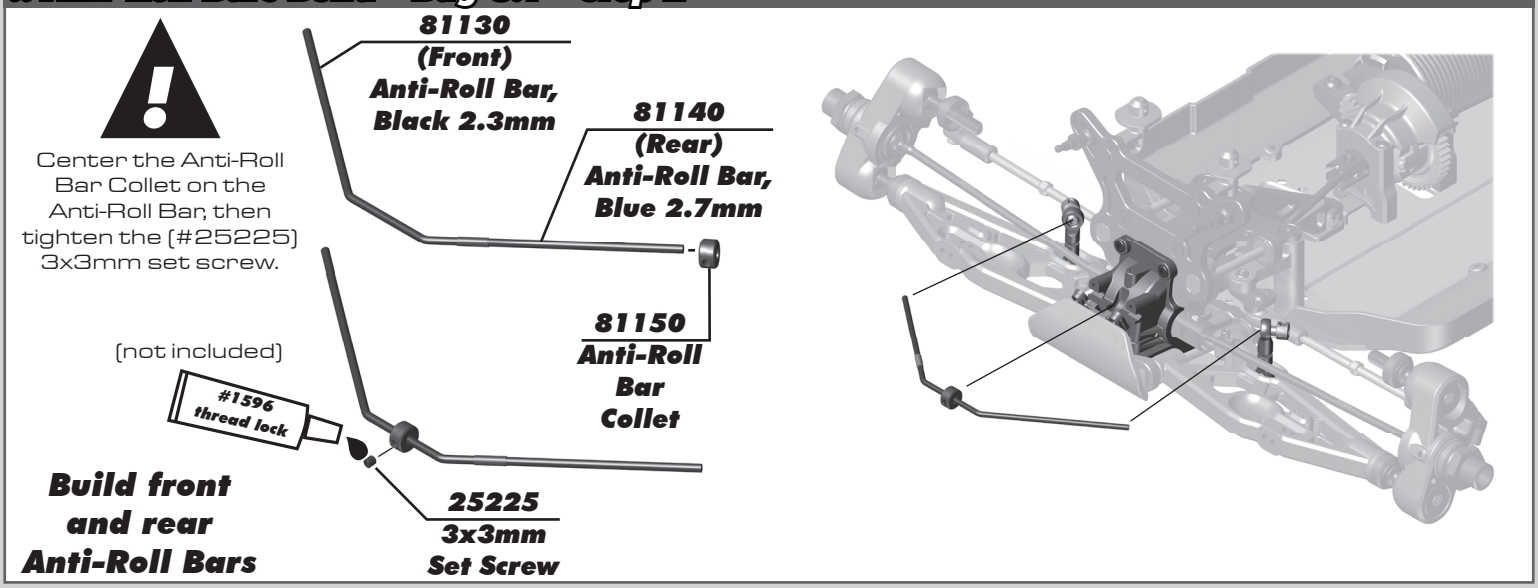

:: Anti-Roll Bars Build - Bag 8.1 - Step 3

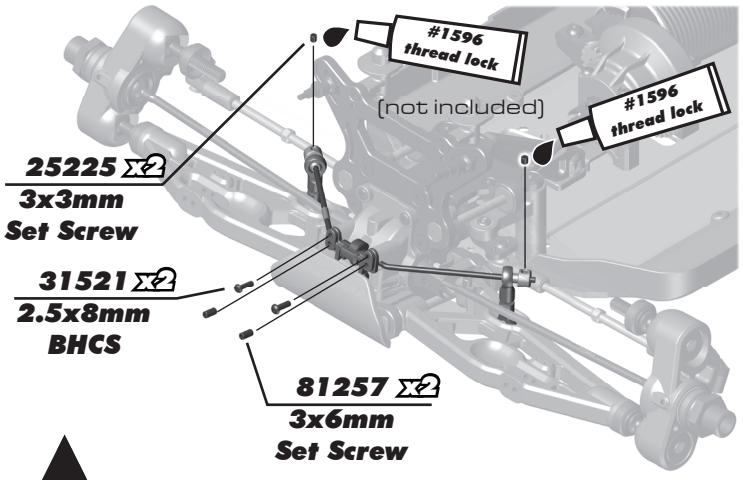

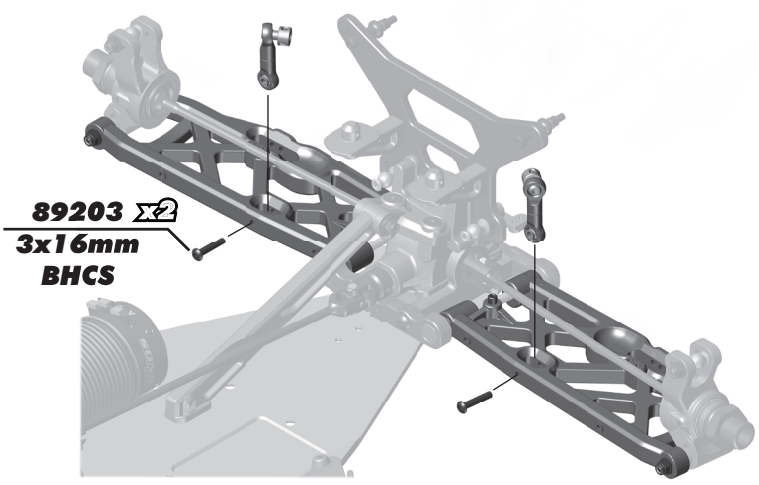

Tighten #81257 set screws just enough to still allow the anti-roll bar to move freely.

:: Anti-Roll Bars Build - Bag 8.1 - Step 4

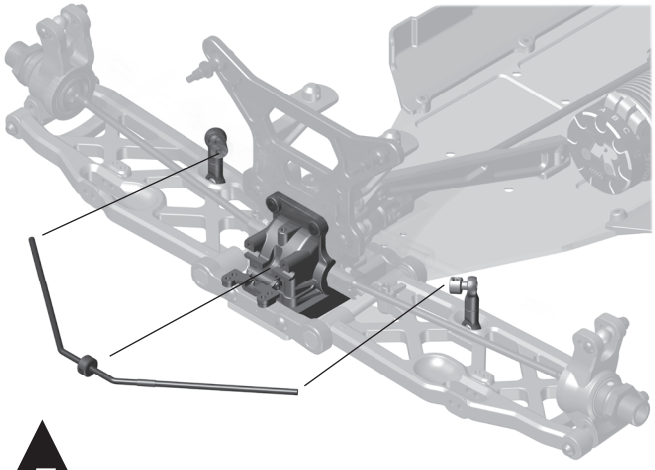

Rear Hub Turnbuckles removed for view clarity.

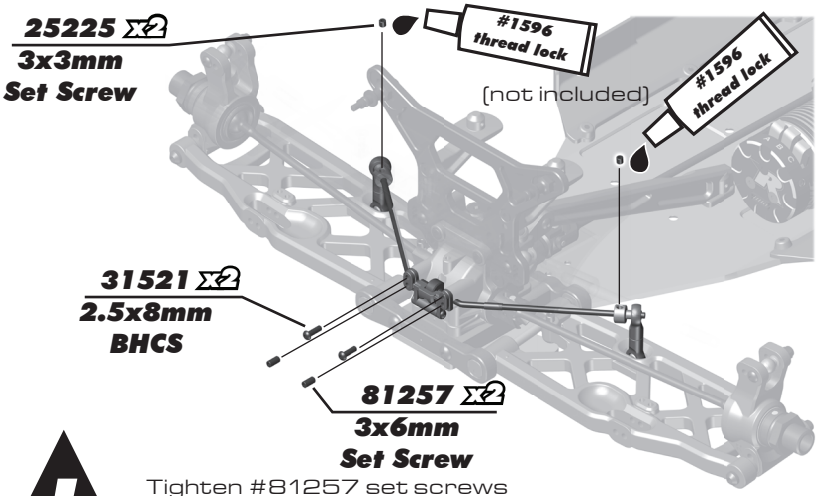

Tighten #81257 set screws just enough to still allow the anti-roll bar to move freely.

:: Shocks Build - Bag 9.1 - Step 1

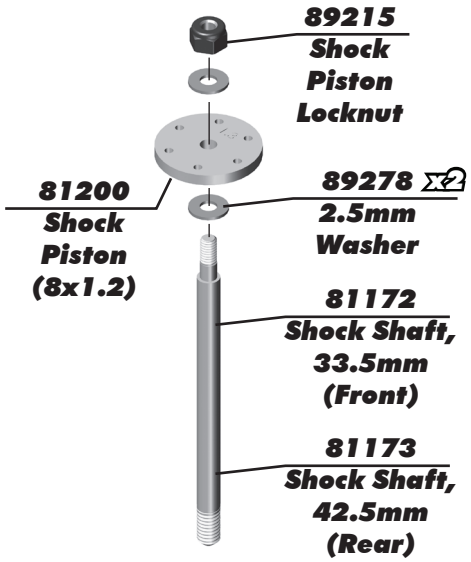

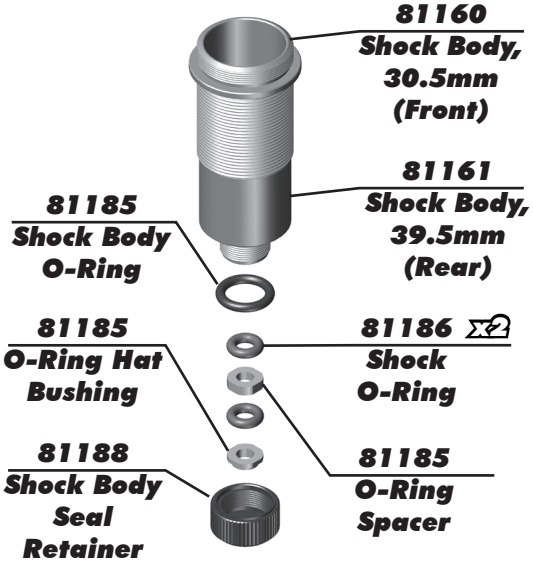

Racer's Tip:
Use shock fluid or green slime (#1105) to lube the O-Rings before installation! (not included)

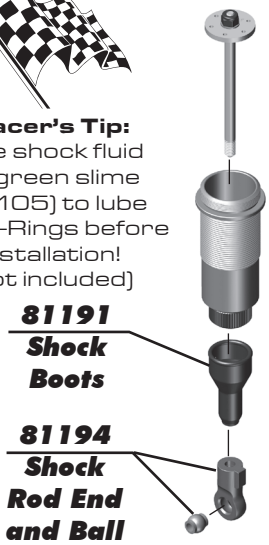

:: Shocks Build - Bag 9.1 - Step 2

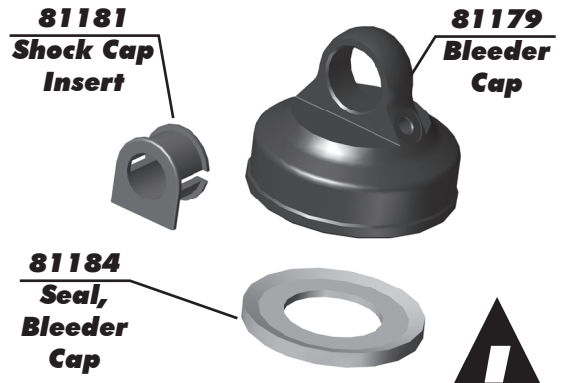

When installing the shock cap seal, make sure it is correctly seated within the shock cap as shown.

Front Shock Fluid: 40wt #5423

Rear Shock Fluid: 35wt #5429

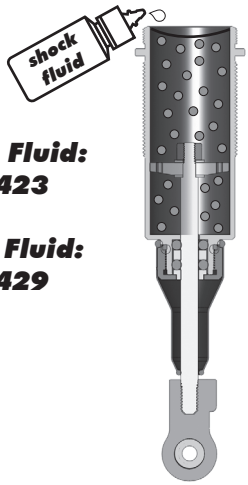

Leave a gap when installing the shock cap.

:: Shocks Build - Bag 9.1 - Step 3

Compress shock shaft fully. Let shock fluid bleed from the bleeder hole.

Some residual shock fluid may appear from your first few runs around the shock cap as a result of bleeding.

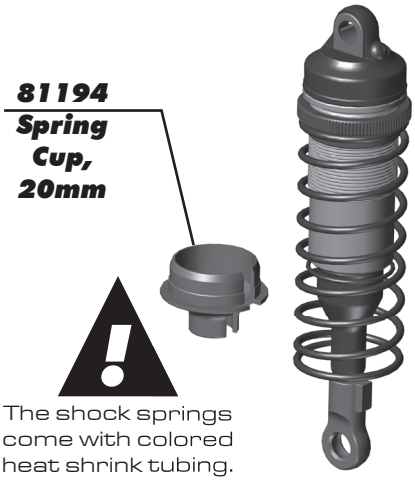

The shock springs come with colored heat shrink tubing. Install them on the springs for easy identification.

:: Shocks Build - Bag 9.1 - Step 4

Kit Setup:
Mount the front shock in the outside hole on the front arm.

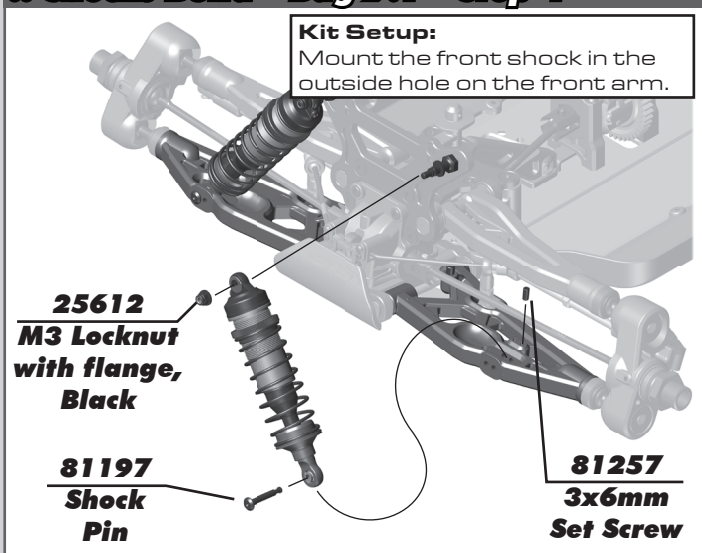

Kit Setup:
Mount the rear shock in the inside hole on the rear arm.

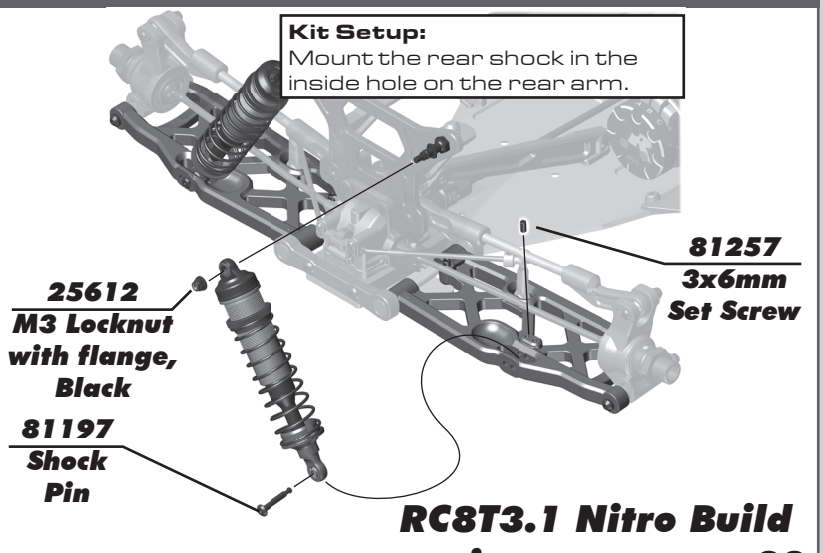

RC8T3.1 Nitro Build continues on page 22

:: Radio Tray Build - Bag 10.1, 10.2 - Step 1

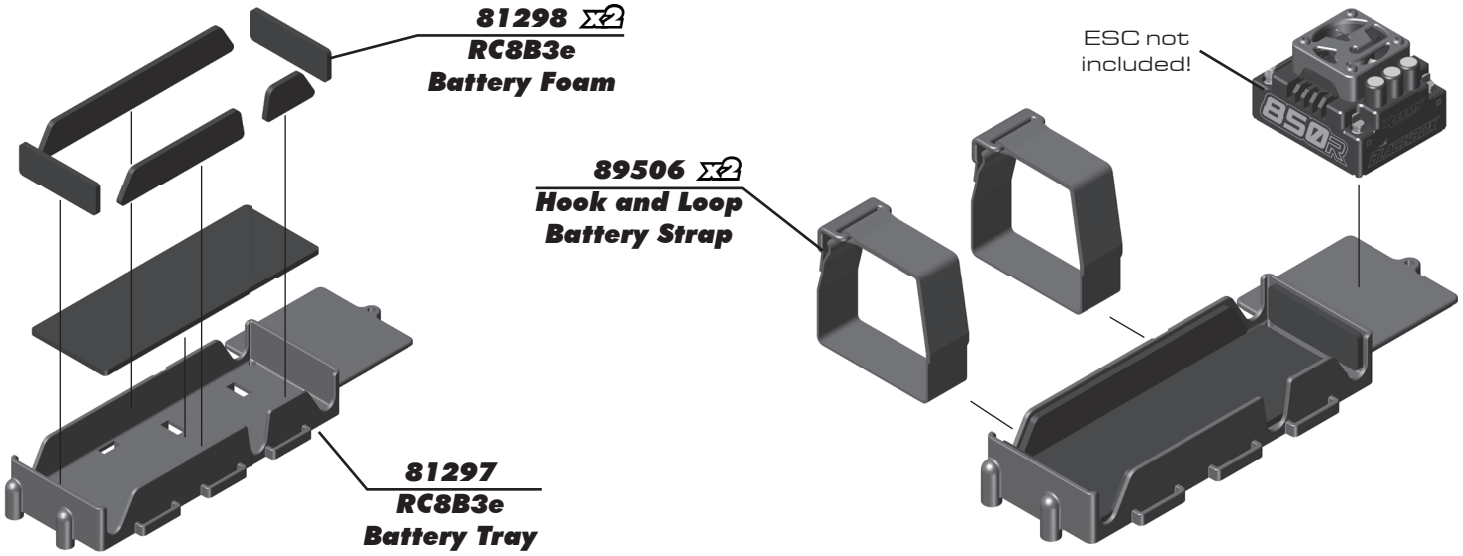

:: Radio Tray Build - Bag 10.1, 10.2 - Step 2

Install the ESC wire as shown first.
Then run the hook and loop straps
as shown.

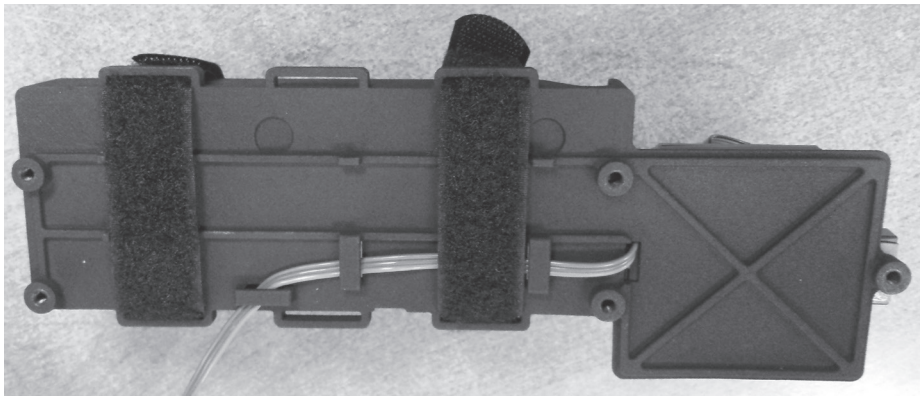

:: Radio Tray Build - Bag 10.1, 10.2 - Step 3

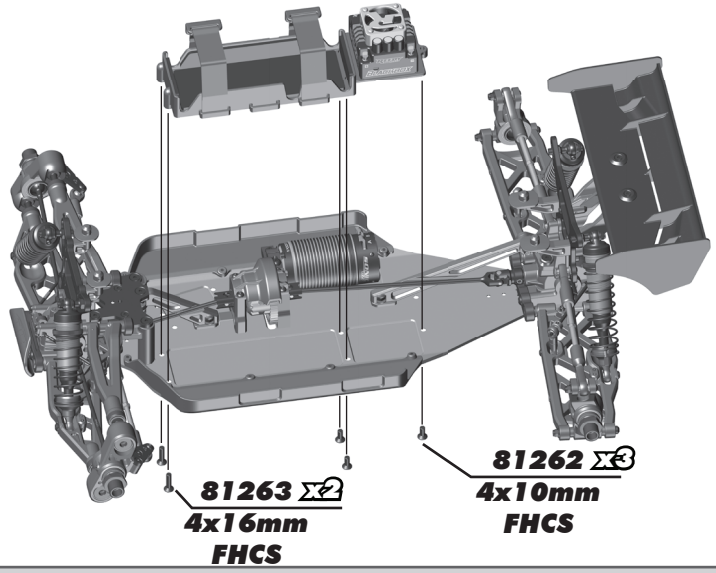

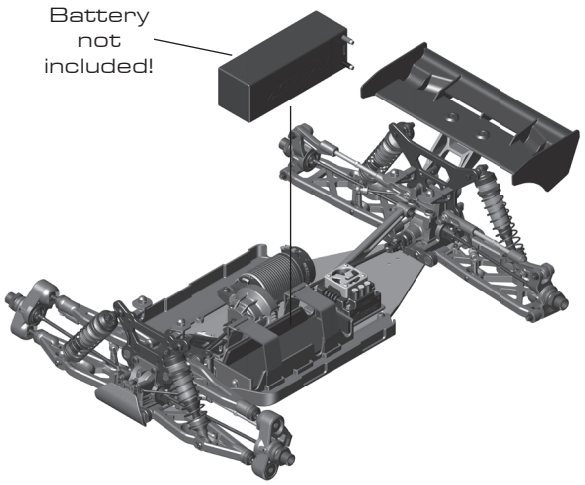

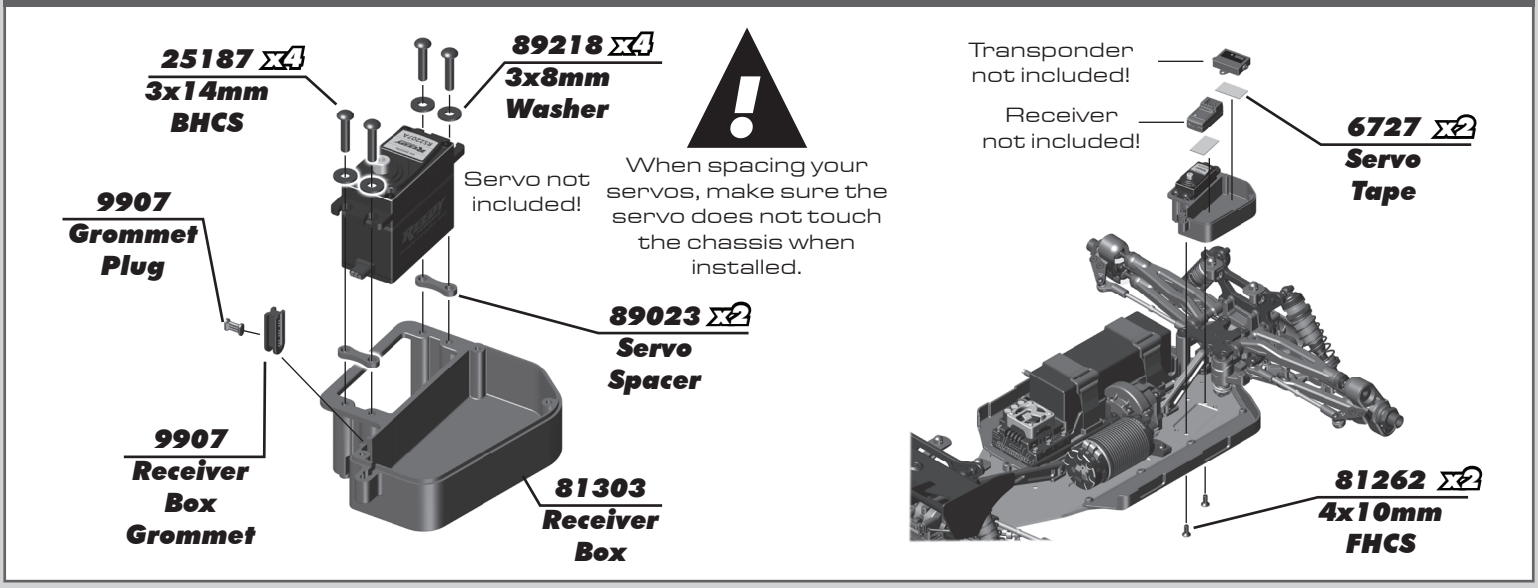

:: Receiver Box / Linkage Build - Bag 11.1, 11.2 - Step 2

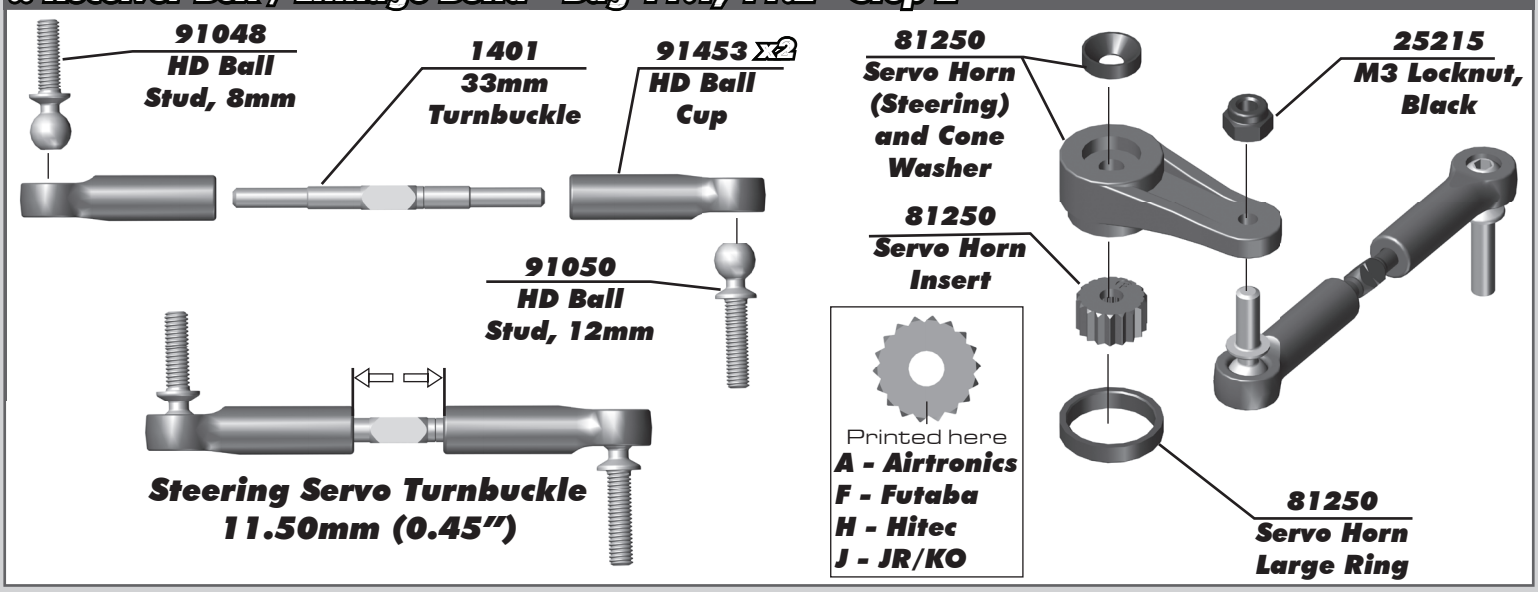

:: Receiver Box / Linkage Build - Bag 11.1, 11.2 - Step 3

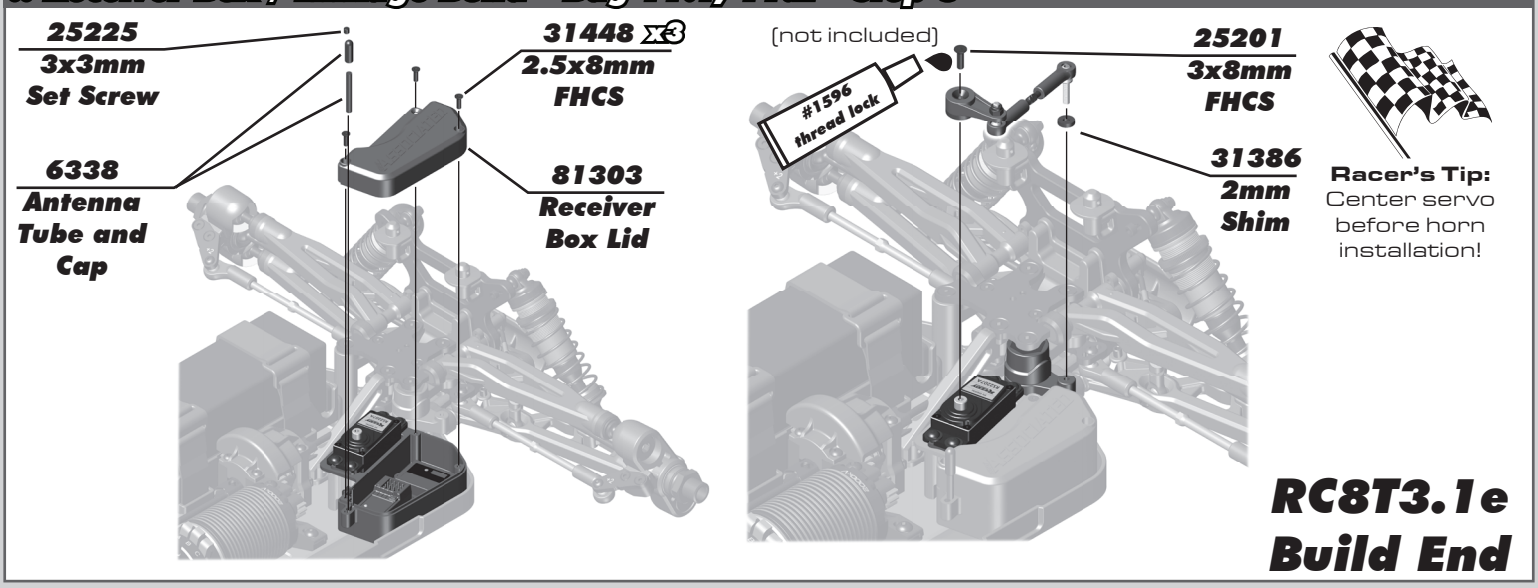

RC8T3.1e Build End

:: Center Bulkhead / Brakes Build - Bag 7.1, 7.2 - Step 1 (RC8T3.1 Nitro)

RC8T3.1 Nitro Build Continued

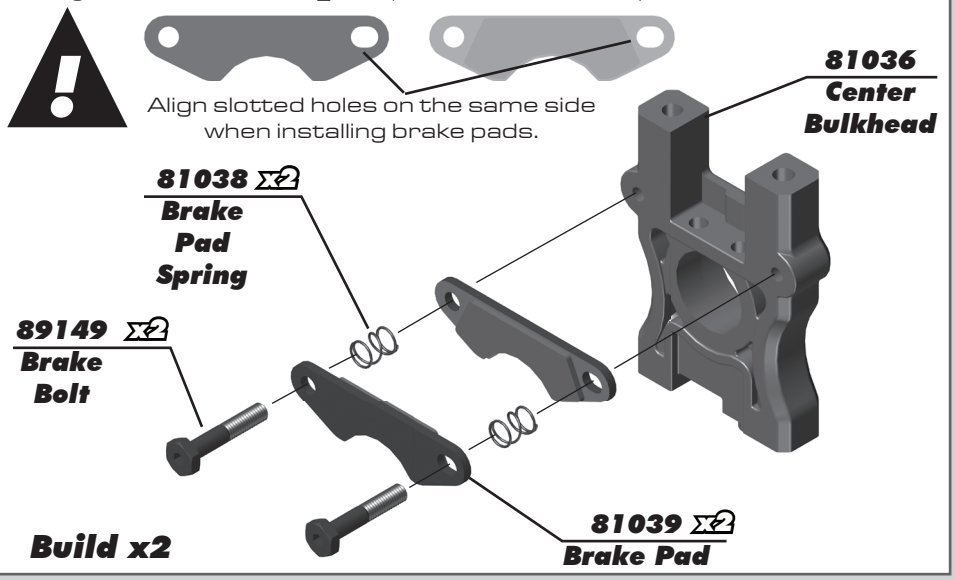

Build x2

:: Center Bulkhead / Brakes Build - Bag 7.1, 7.2 - Step 2 (RC8T3.1 Nitro)

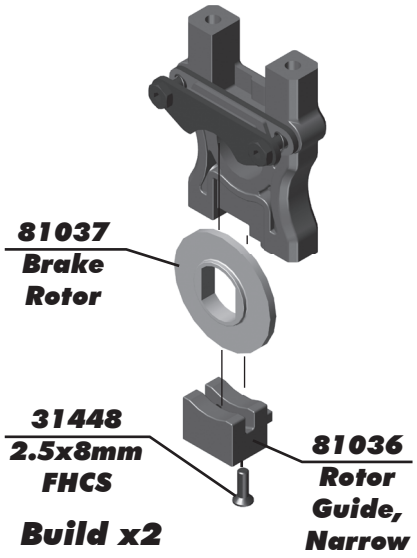

Build x2

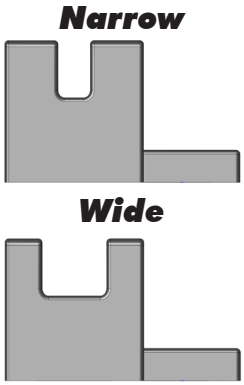

Wide Rotor Guide used for optional #89123 Heat Sink Brake Disc.

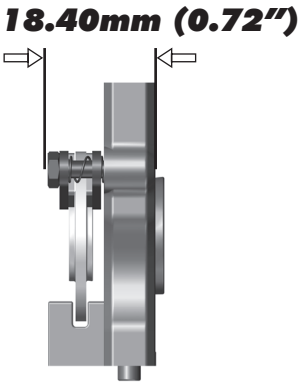

:: Center Bulkhead / Brakes Build - Bag 7.1, 7.2 - Step 3 (RC8T3.1 Nitro)

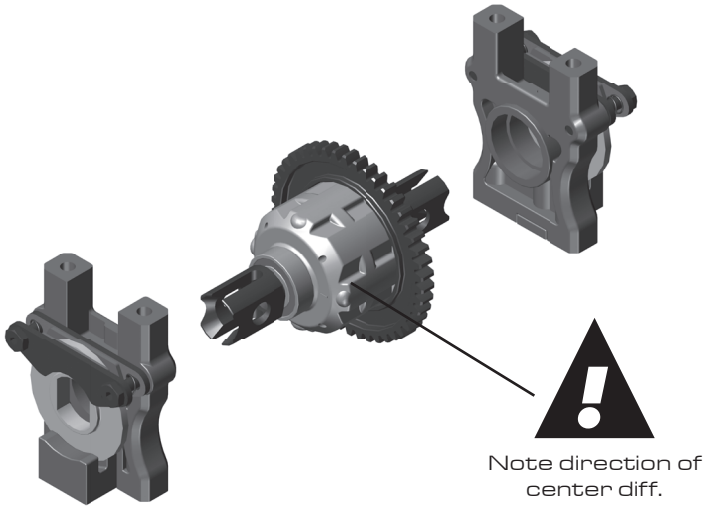

Note direction of center diff.

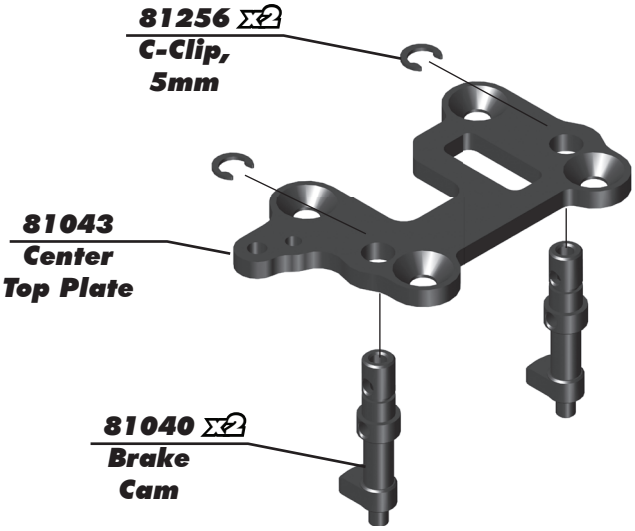

:: Center Bulkhead / Brakes Build - Bag 7.1, 7.2 - Step 4 (RC8T3.1 Nitro)

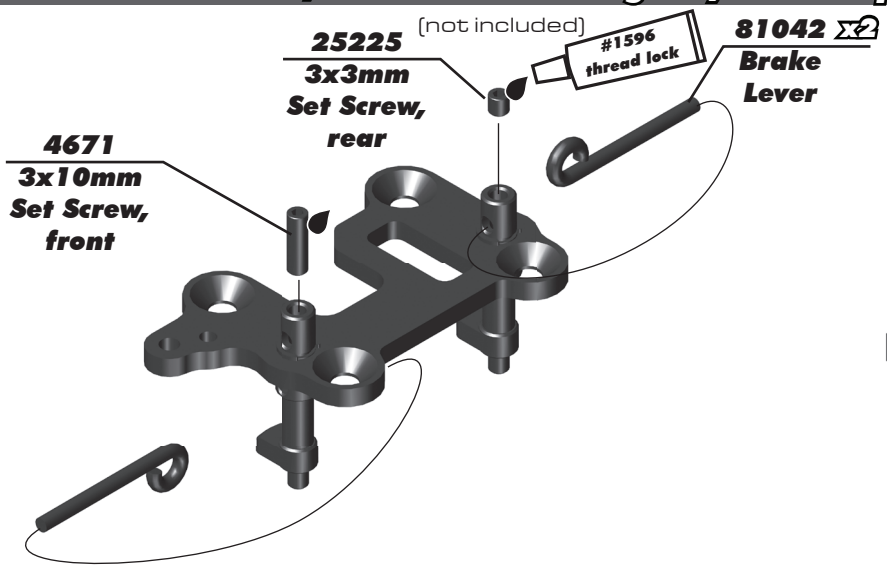

Center brake levers between the brake cams.

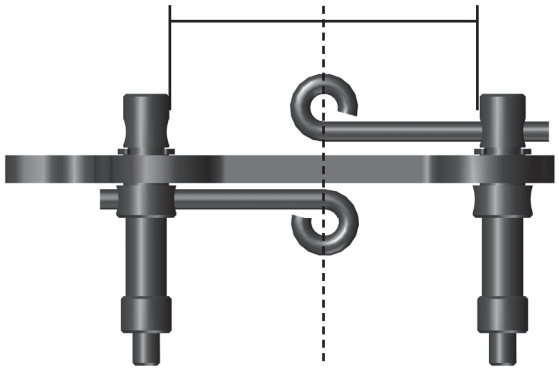

:: Center Bulkhead / Brakes Build - Bag 7.1, 7.2 - Step 5 (RC8T3.1 Nitro)

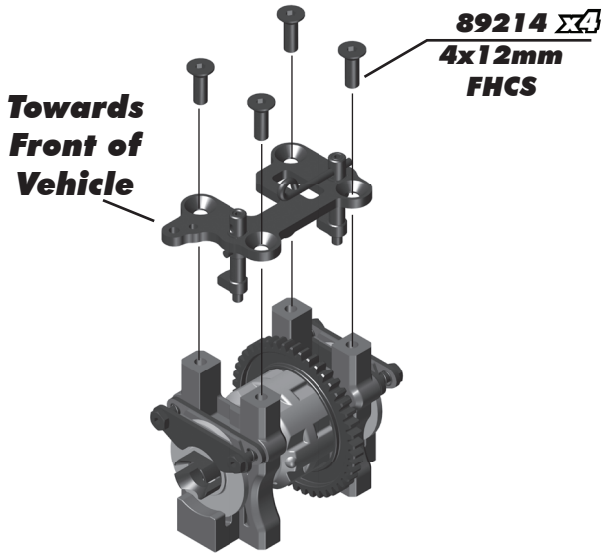

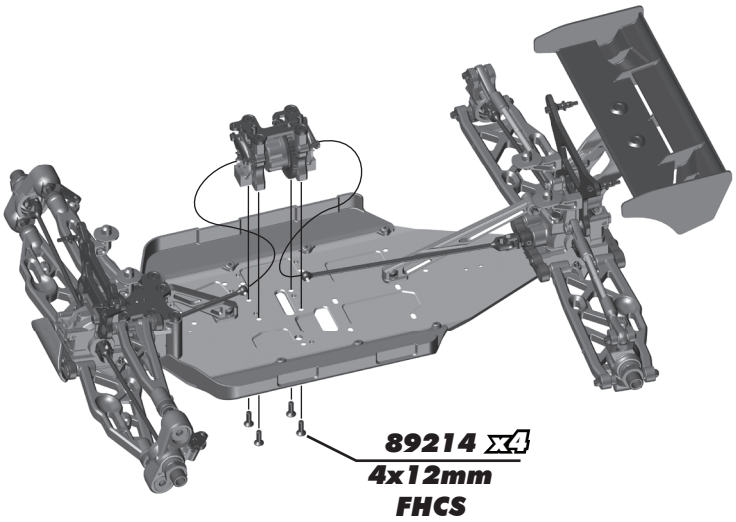

:: Radio Tray Build - Bag 10.1, 10.2 - Step 1

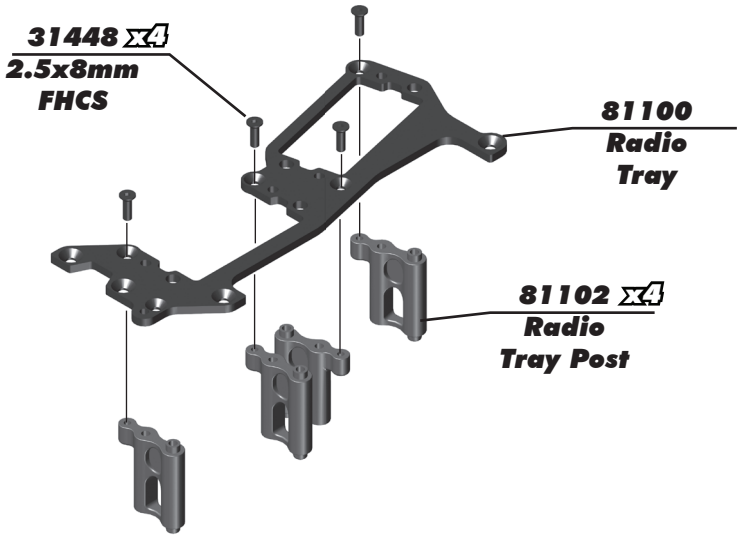

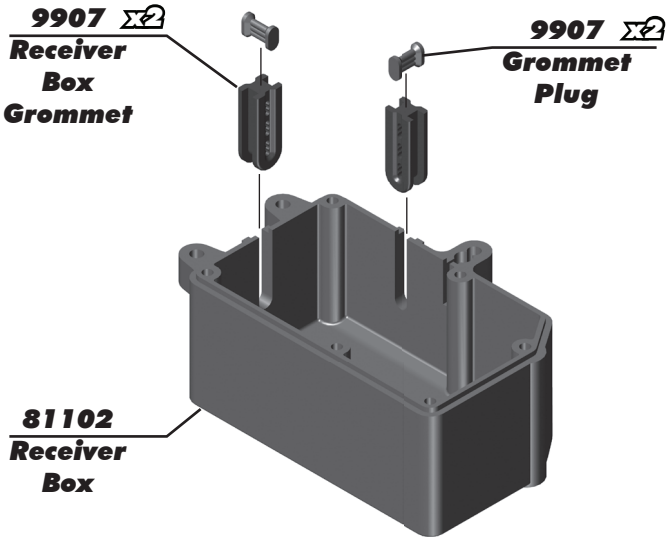

:: Radio Tray Build - Bag 10.1, 10.2 - Step 2

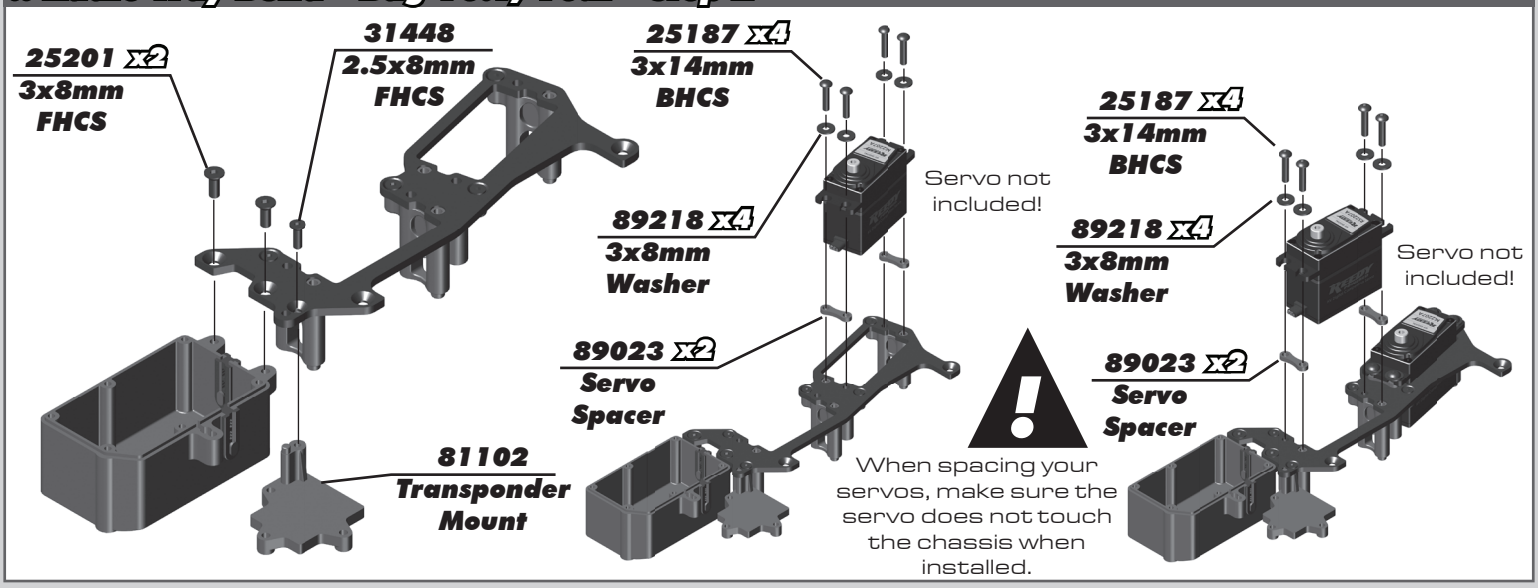

:: Radio Tray Build - Bag 10.1, 10.2 - Step 3

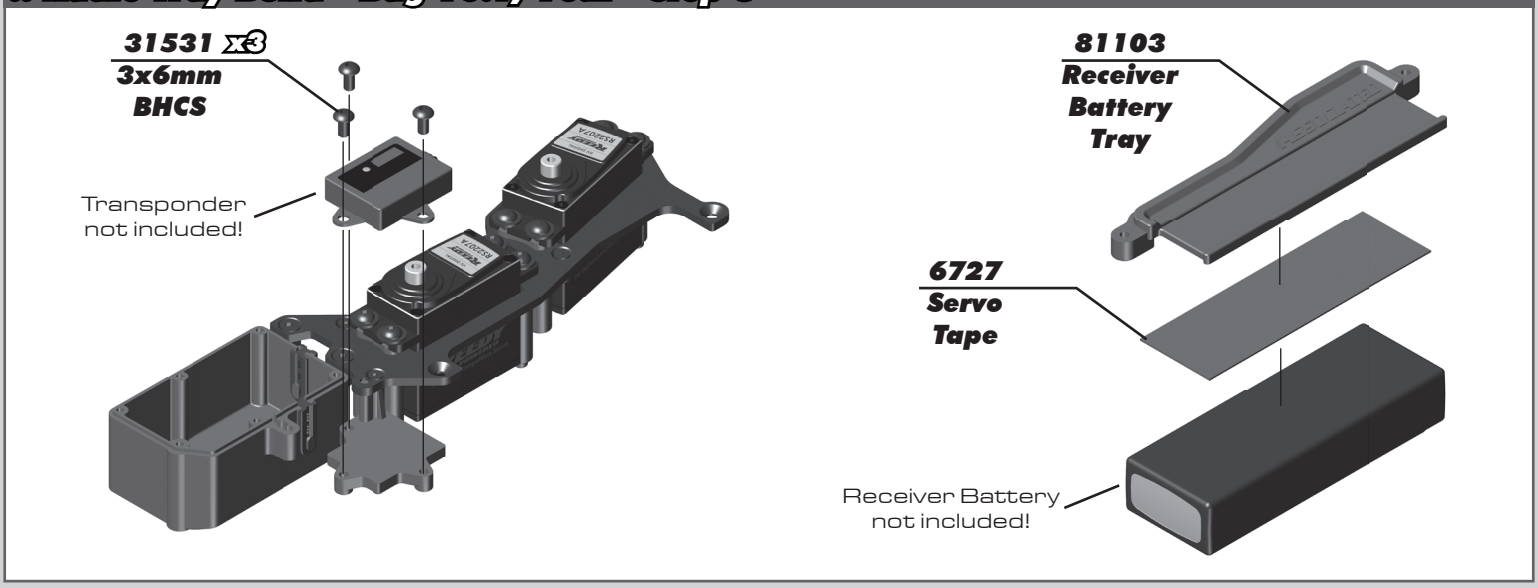

:: Radio Tray Build - Bag 10.1, 10.2 - Step 4

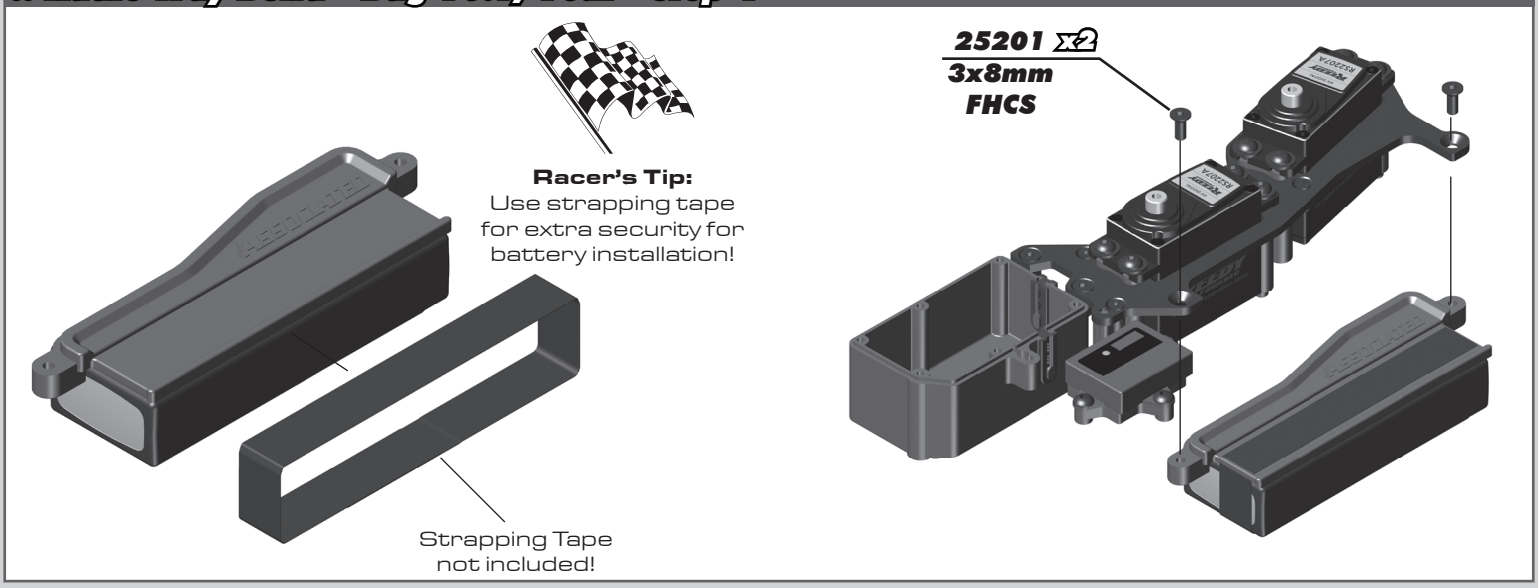

:: Radio Tray Build - Bag 10.1, 10.2 - Step 5

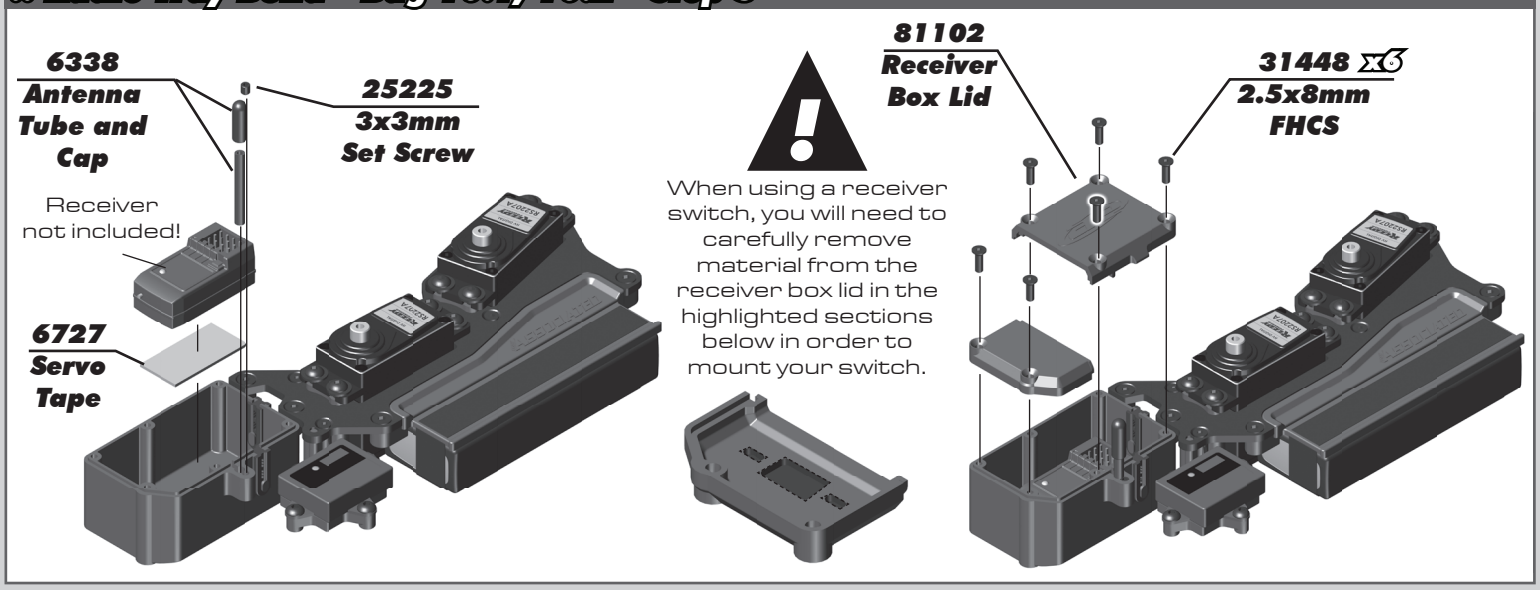

:: Radio Tray Build - Bag 10.1, 10.2 - Step 6

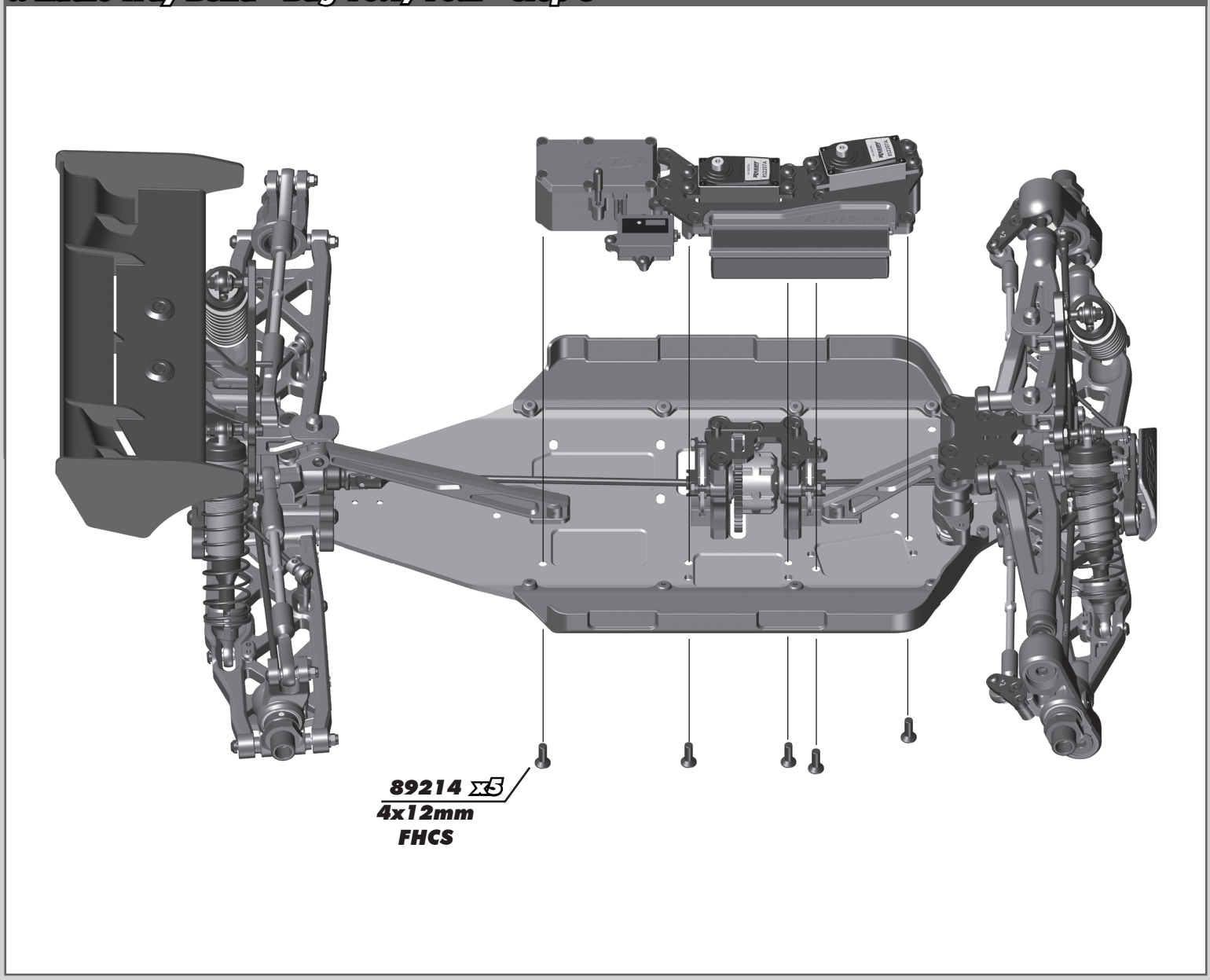

:: Servo Horns / Linkage Build - Bag 11.1, 11.2 - Step 1

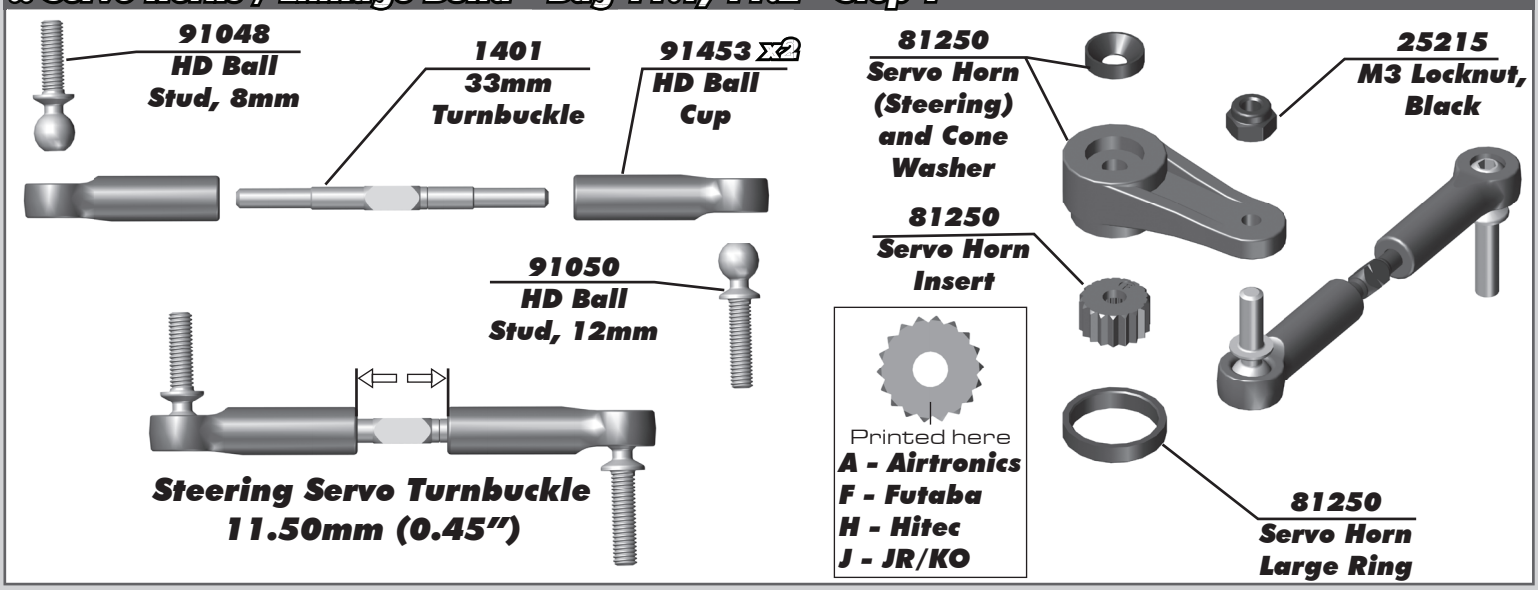

:: Servo Horns / Linkage Build - Bag 11.1, 11.2 - Step 2

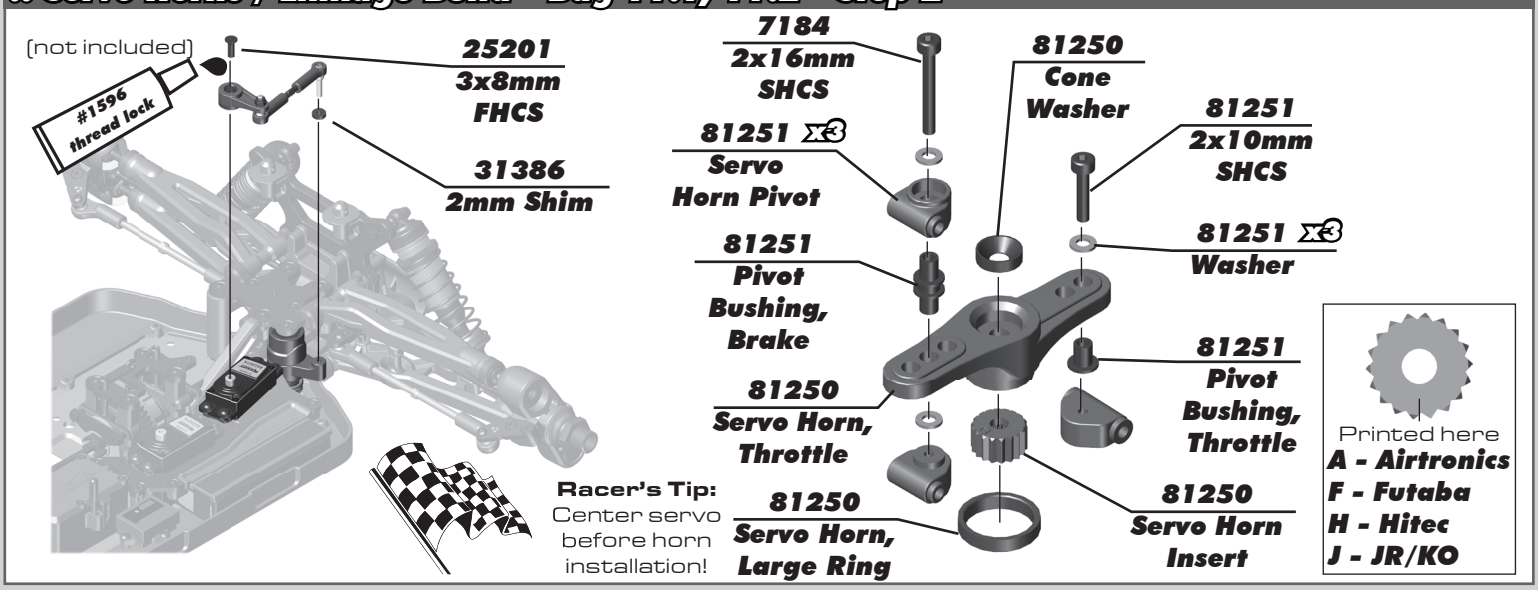

:: Servo Horns / Linkage Build - Bag 11.1, 11.2 - Step 3

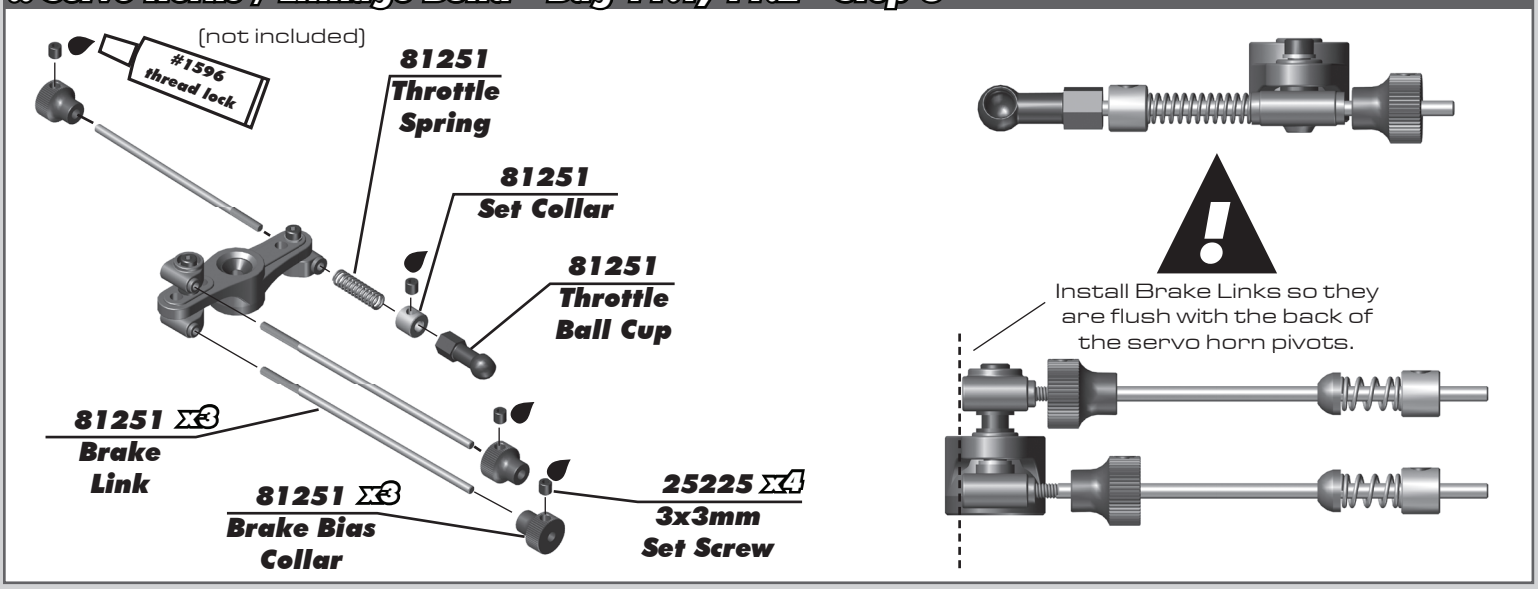

:: Servo Horns / Linkage Build - Bag 11.1, 11.2 - Step 4

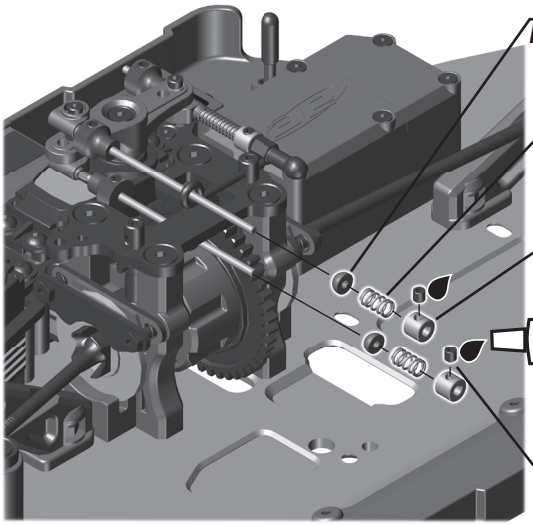

81251 x2
Brake Linkage Spring Ball

8433 x2
.024 Spring

81251 x2
Set Collar

#1596 thread lock
(not included)

25225 x2
3x3mm Set Screw

Racer's Tip:
Center servo before horn installation!

(not included)
#1596 thread lock

25201
3x8mm FHCS

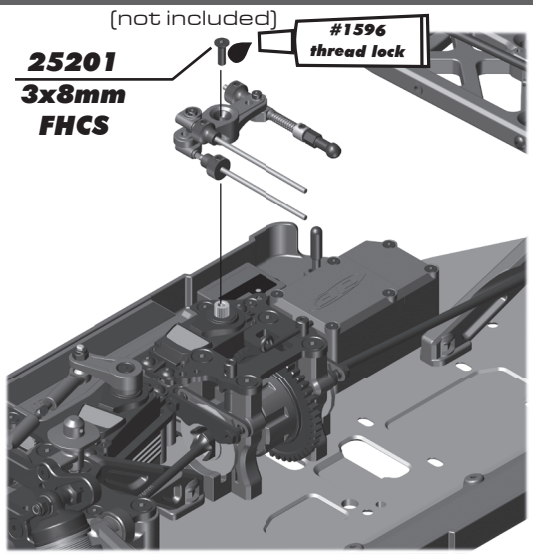

:: Engine / Tank Build - Bag 12.1, 12.2 - Step 1

3719 x2
6" Nylon Wire Tie

81322
RC8T3 Fuel Tank

81322 x2
Fuel Tank Clip

25211 x2
3x10mm BHCS

89218 x2
3x8mm Washer

31520 x2
2.5x6mm BHCS

7725
Fuel Tubing (22mm long)

81122 x2
Fuel Tank Post

81262 x2
4x10mm FHCS

:: Engine / Tank Build - Bag 12.1, 12.2 - Step 2

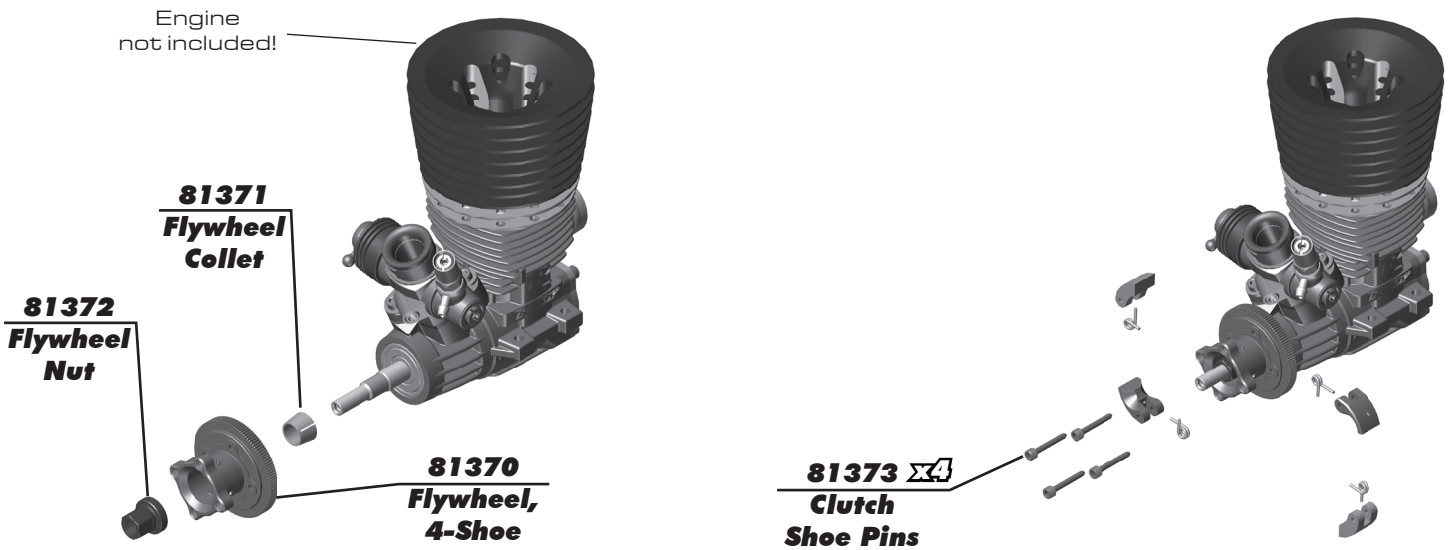

:: Engine / Tank Build - Bag 12.1, 12.2 - Step 3

Clutch Shoe / Spring Installation Order:

Short end of clutch shoe spring installed into flywheel.
Long end of clutch shoe spring installed into clutch shoe.

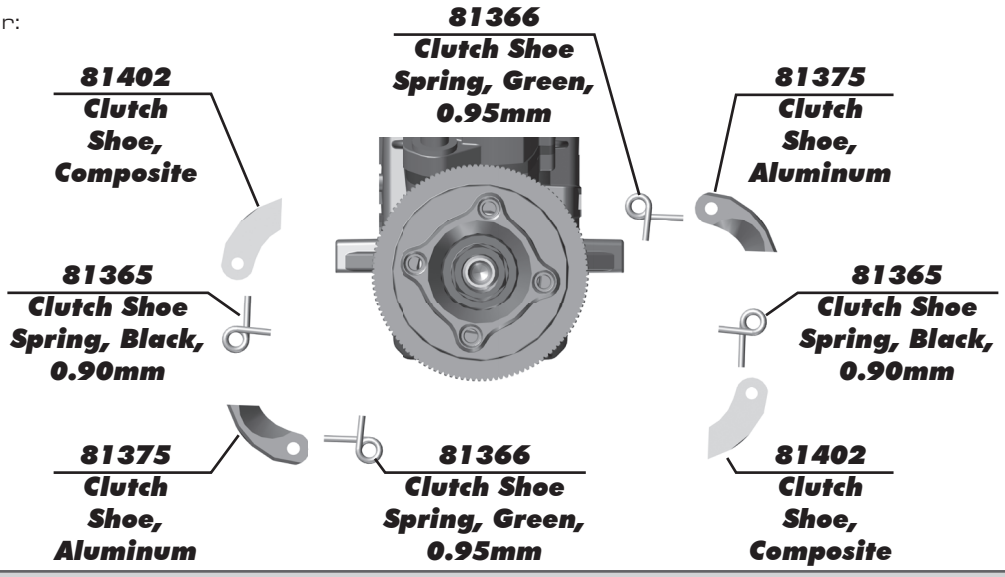

:: Engine / Tank Build - Bag 12.1, 12.2 - Step 4

Clutch shimming instructions:
If assembly does not spin freely, use #89148 (small clutch shim included in kit) on screw to increase end play.
If crankcase extends past clutch bearing, use#89218 (large clutch shim included in kit) to reduce end play.

Recommended Clutch Bell
Axial Play = 0.2 - 0.5mm

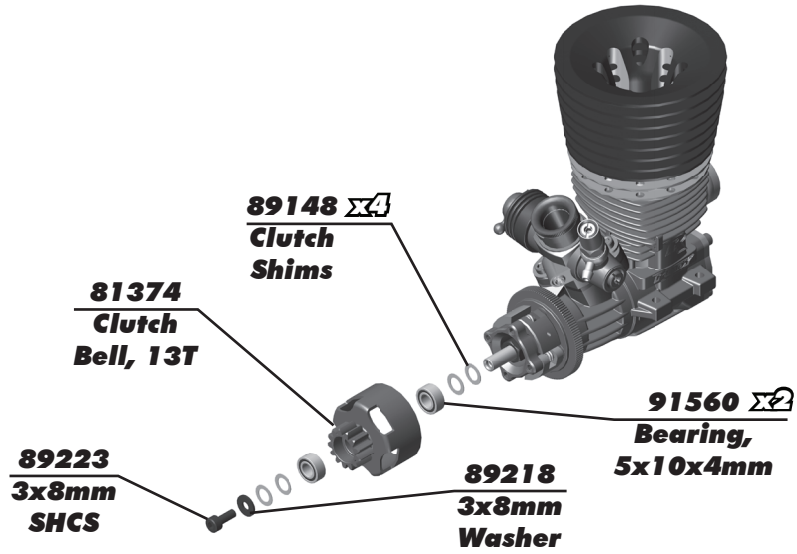

:: Engine / Tank Build - Bag 12.1, 12.2 - Step 5

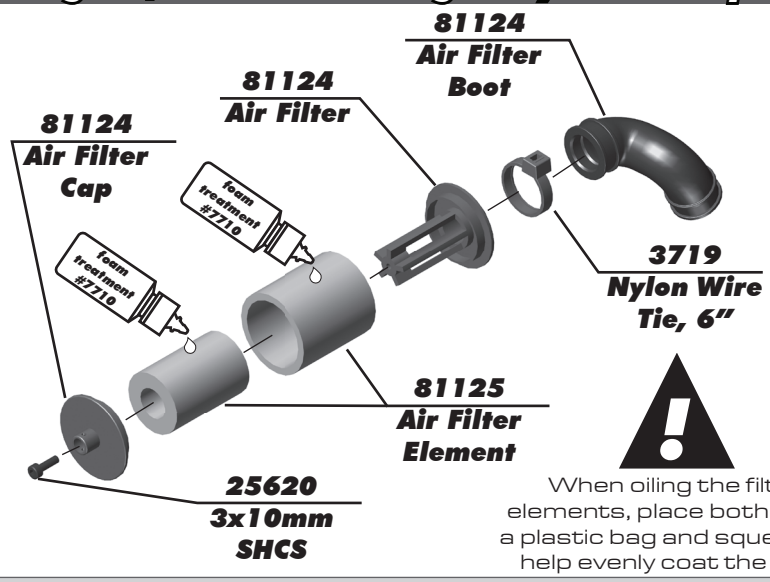

When oiling the filter elements, place both inside a plastic bag and squeeze to help evenly coat the filter.

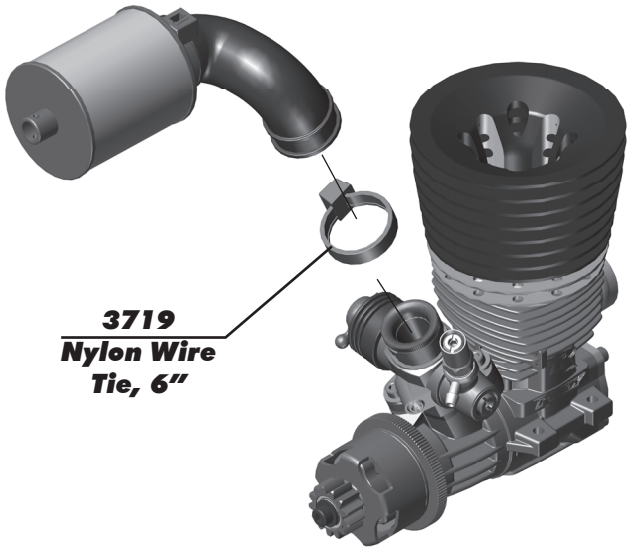

:: Engine / Tank Build - Bag 12.1, 12.2 - Step 4

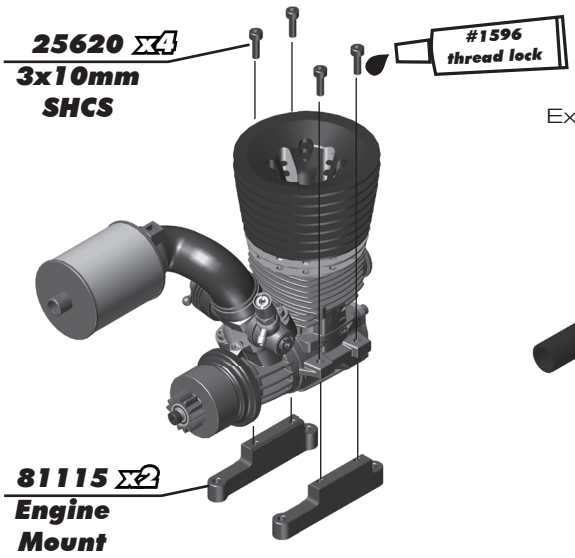

(not included)

Exhaust spring not included!

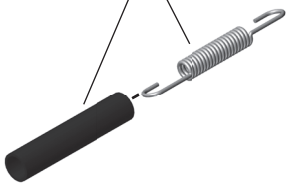

Header pipe not included!

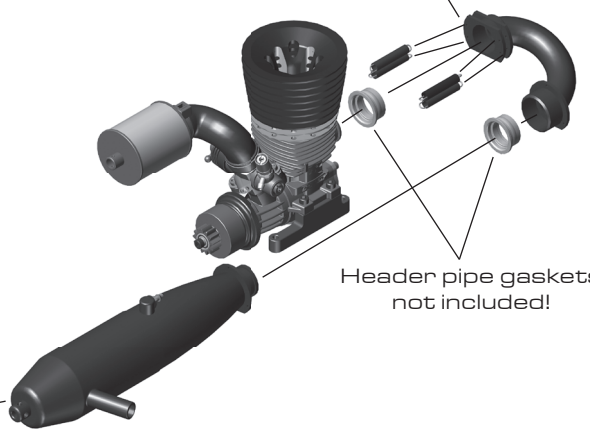

Header pipe gaskets not included!

Exhaust Pipe not included!

:: Engine / Tank Build - Bag 12.1, 12.2 - Step 5

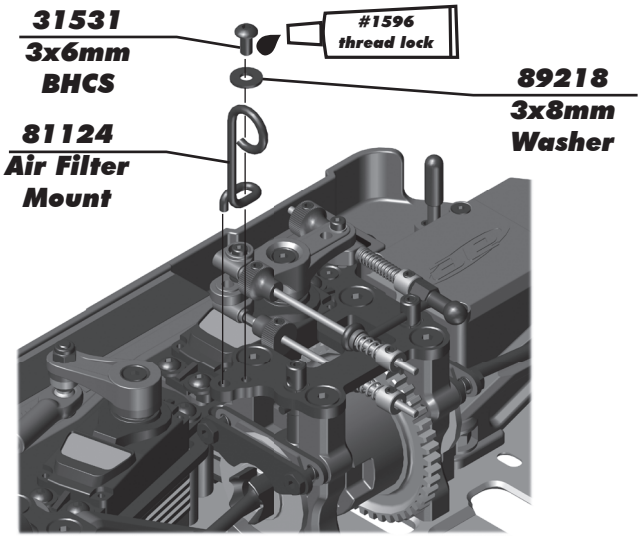

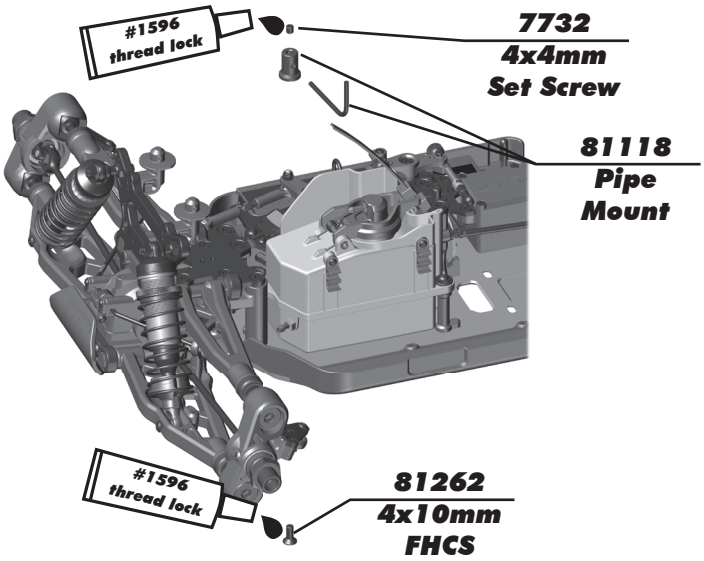

:: Engine / Tank Build - Bag 12.1, 12.2 - Step 6

When installing your engine, make sure the rear drive shaft does not interfere with the engine mount. You may need to remove material from the engine mount for fitment.

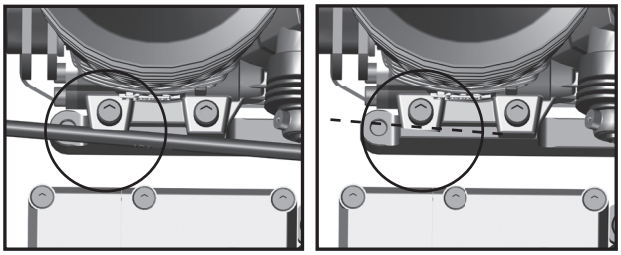

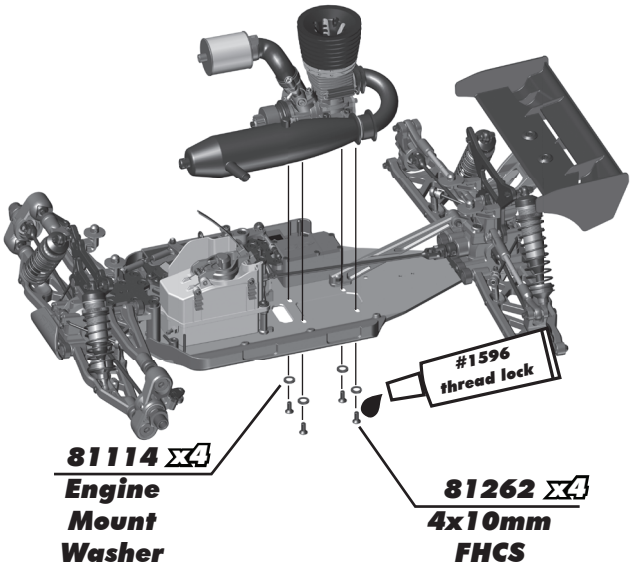

:: Engine / Tank Build - Bag 12.1, 12.2 - Step 7

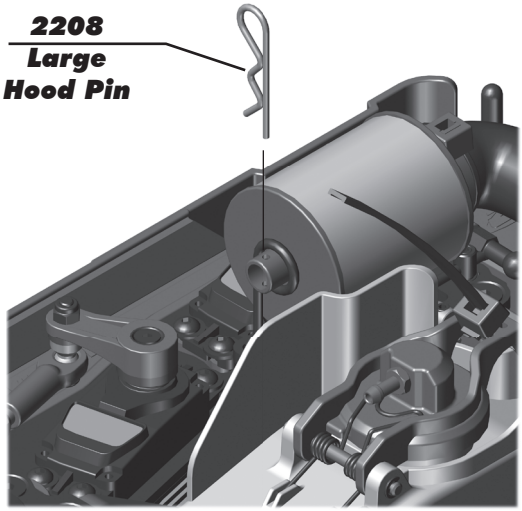

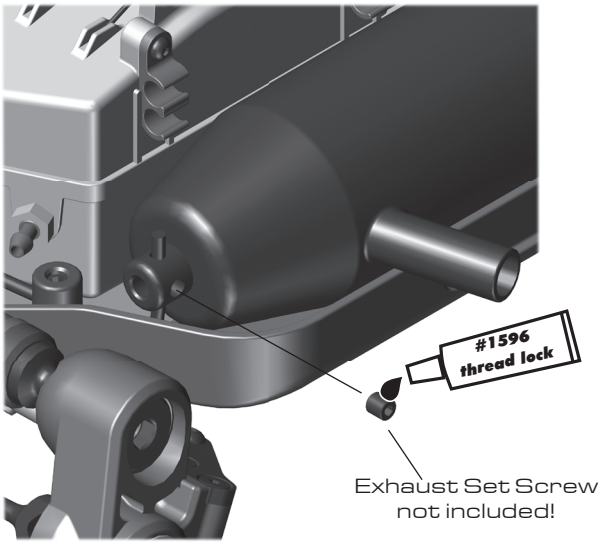

:: Engine / Tank Build - Bag 12.1, 12.2 - Step 8

Pressure line from fuel tank lid to exhaust pipe (6.5" of length suggested)

Fuel line from fuel tank to carburetor (6.5" of length suggested)

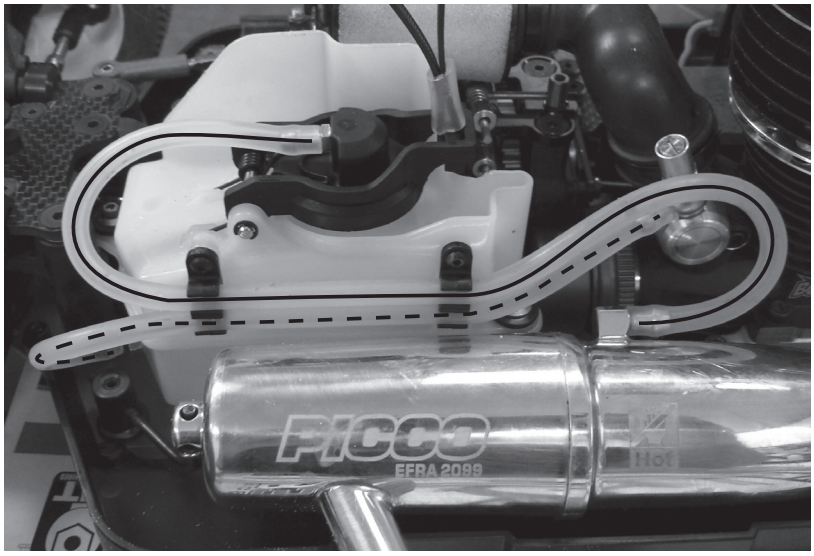

:: Wheels / Tires / Body - Misc. - Step 1

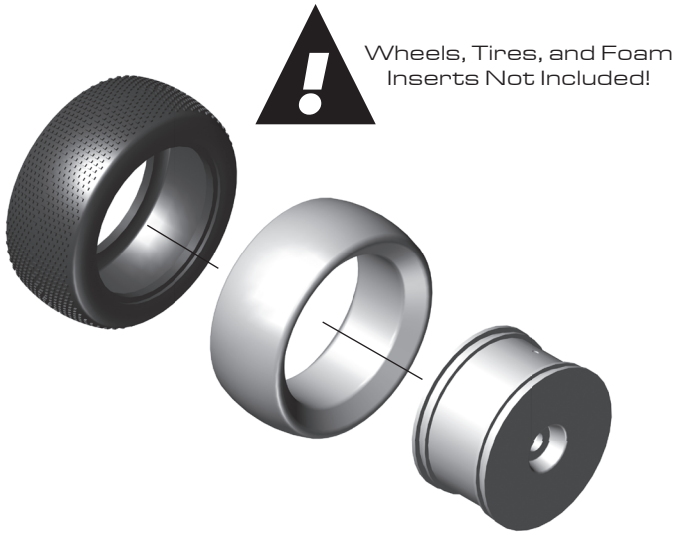

Tires:
When gluing tires to wheels, use a fast-curing tire glue (CA) (AE # 1597). This is available at your local hobby shop. Make sure to clean the mounting surface of the tire and wheel with alchohol for best adhesion.

:: Wheels / Tires / Body - Misc. - Step 2

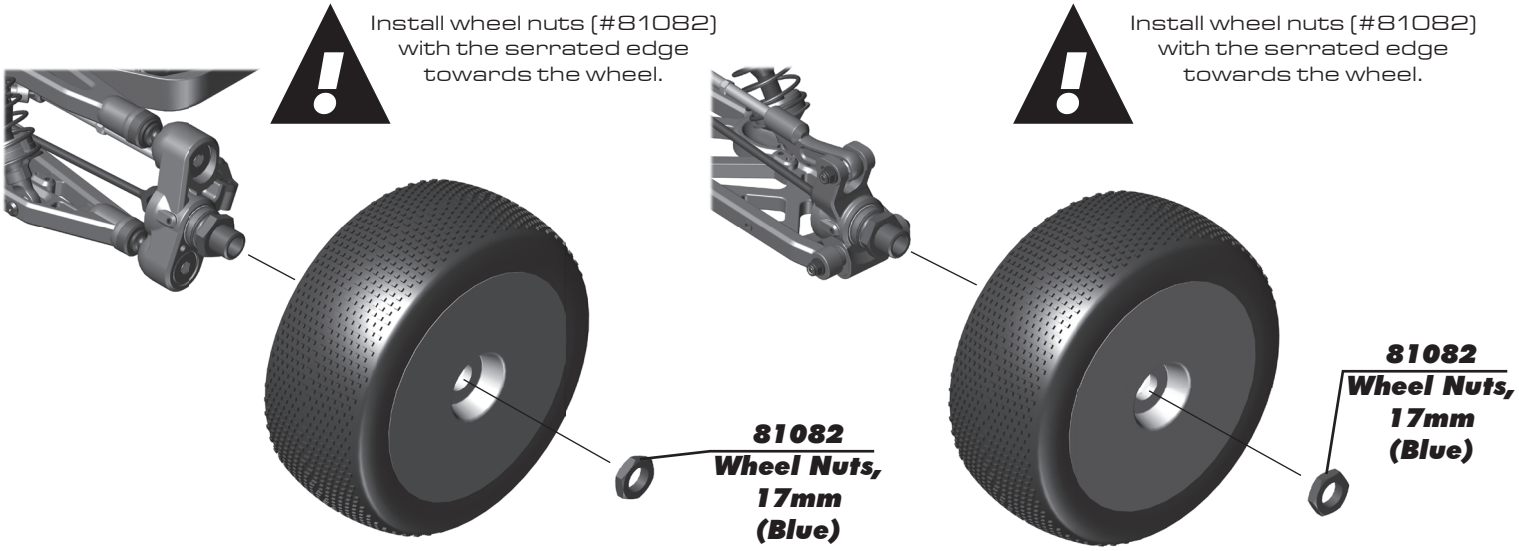

:: Wheels / Tires / Body - Misc. - Step 3

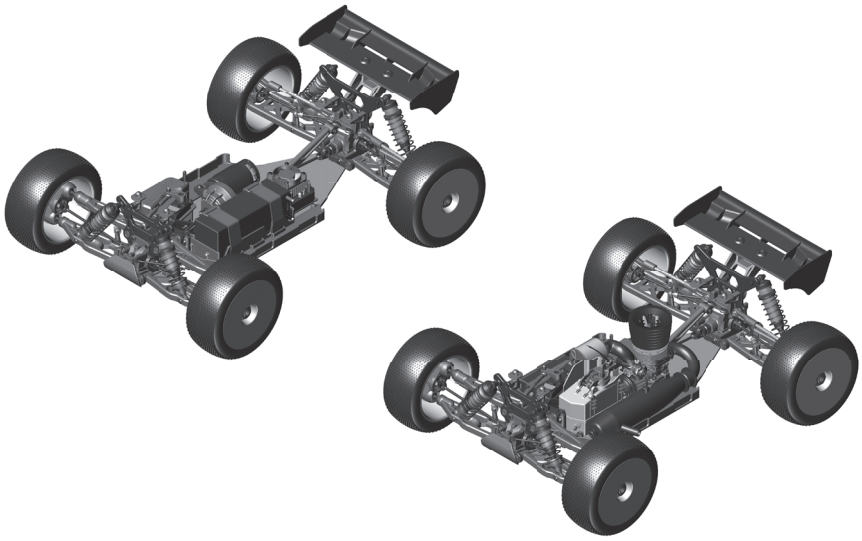

Painting Tips:
Your new kit comes with a clear polycarbonate body. You will need to prep the body before you can paint it. Wash the inside thoroughly with warm water and liquid detergent. Dry the body using a clean, soft, lint-free cloth. Install the window masks on the inside of the body (RC car bodies get painted on the inside).
If creating a design, using high quality masking tape, apply tape to the inside of the body to create a design. Spray (either rattle can or airbrush R/C specific paint) the paint to the inside of the body (prefferably dark colors first, lighter colors last).

NOTE: use ONLY paint that is recommended for use with (polycarbonate) plastics. If you do not, you can destroy the polycarbonate body!!!

After painting, cut the body along the trim lines. Make sure to drill or use a body reamer to make the holes for the body mounts and antenna!

:: Droop Settings

Set droop by measuring overall length of shock (from standoff to shock pin) while the chassis is elevated above your working surface. The shocks should be fully extended.
Kit setup for front droop is 104mm shock length, and 124mm shock length for the rear.
If the shock length is too long, adjust by turning the droop screws clockwise.
If the shock length is too short, adjust by turning the droop screws counter-clockwise.

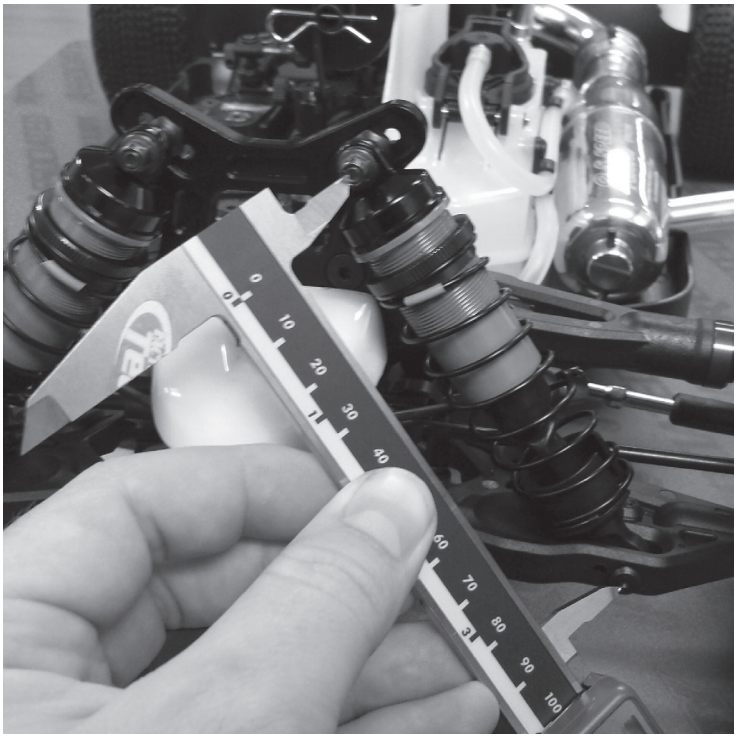

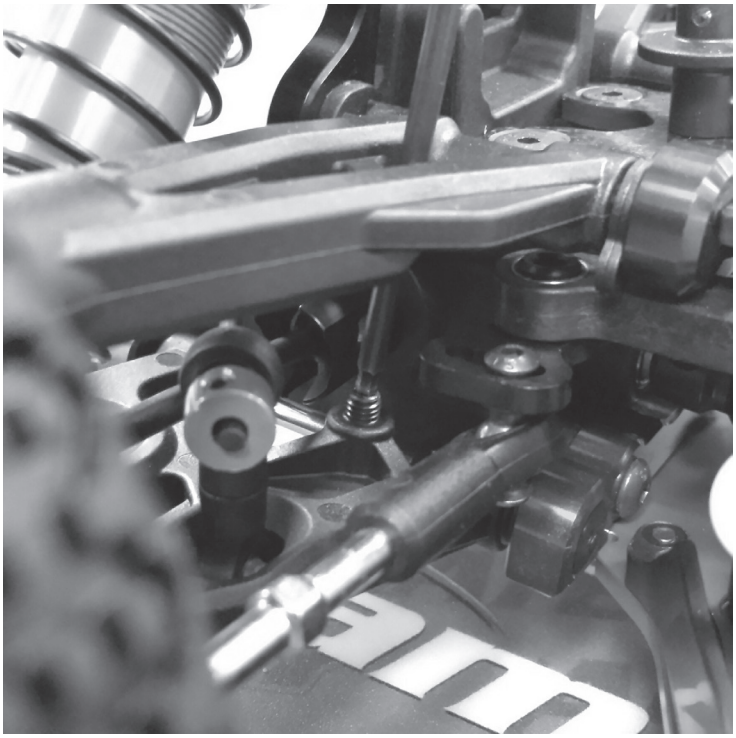

Front Droop: Increasing front droop (loosen droop screws) will increase off-throttle steering. It also allows the front end to lift more, giving more rear grip and less front grip on-power. Remember to never loosen the screws beyond the FULL DROOP setting. Decreasing front droop (tighten droop screws) yields more on-power steering and quicker response at the expense of some stability in bumpy sections. It will also give less off-throttle steering.

Rear Droop: Increasing rear droop (loosen droop screws) will increase traction in bumpy sections, but will reduce high-speed stability. Remember to never loosen the screws beyond the FULL DROOP setting. Decreasing rear droop (tighten droop screws) will increase stability in high speed sections, but will reduce stability in bumpy sections.

Setup Sheets:

Most often the best way to get your car handling right is to go to our website www.rc10.com and click on the "Setup Sheets" link, then the link to your vehicle, then search for your vehicle. Our team of professional drivers help develop these setups at National events. Also, most drivers have a "base" setup that they use as a starting point for every event. Try running some of our base setups OR look for track conditions and tires that are similar to your local track and mimic that setup. Remember, each adjustment has a purpose, so copy everything from the setup sheet and then make adjustments based on the recommendations in here at http://www.rc10.com/rc/tuning.

:: Shocks

81156	RC8B3 Shock Kit (Front) - Requires #81172, 81191	1
81157	RC8B3 Shock Kit (Rear) - Requires #81173, 81191	1
81160	RC8B3 Shock Body, 30.5mm	2
81161	RC8B3 Shock Body, 39.5mm	2
81172	RC8T3 Shock Shaft, 33.5mm (TiN)	2
81173	RC8T3 Shock Shaft, 42.5mm (TiN)	2
81176	RC8T3 FT Chrome Shock Shafts, 3.5x33.5 mm	2
81177	RC8T3 FT Chrome Shock Shafts, 3.5x42.5 mm	2
81179	Bleeder Shock Caps, 16mm	2
81181	RC8B3 Shock Cap Insert	4
81184	Bleeder Shock Cap Seals, 16 mm	4
81185	RC8B3 Shock Rebuild Kit	1
81186	RC8B3 Shock O-Ring	8
81188	RC8B3 Shock Body Seal Retainer	2
81191	RC8T3 Shock Boots	4
81194	Shock Rod Ends & Spring Cups, 20mm	4 ea.
81200	RC8B3 Shock Pistons (6x1.3, 6x1.3 T, 8x1.2 T)	2 ea.
89215	M2.5 Locknut (silver)	10
81221	Spring Collars & O-Rings, 20mm	2 ea.
81407	RC8B3.1 Shock Seal Bushing Set	4 ea.
89278	Washer, 2.5mm	20
91492	12mm V2 Bleeder Gaskets and Screws	2 ea.

:: Shock Fluid

5420	10 Weight Silicone Shock Fluid	2oz.
5421	20 Weight Silicone Shock Fluid	2oz.
5422	30 Weight Silicone Shock Fluid	2oz.
5423	40 Weight Silicone Shock Fluid	2oz.
5424	22.5 Weight Silicone Shock Fluid	2oz.
5425	80 Weight Silicone Shock Fluid	2oz.
5426	27.5 Weight Silicone Shock Fluid	2oz.
5427	15 Weight Silicone Shock Fluid	2oz.
5428	25 Weight Silicone Shock Fluid	2oz.
5429	35 Weight Silicone Shock Fluid	2oz.
5430	45 Weight Silicone Shock Fluid	2oz.
5431	55 Weight Silicone Shock Fluid	2oz.
5432	32.5 Weight Silicone Shock Fluid	2oz.
5433	37.5 Weight Silicone Shock Fluid	2oz.
5434	42.5 Weight Silicone Shock Fluid	2oz.
5435	50 Weight Silicone Shock Fluid	2oz.
5436	60 Weight Silicone Shock Fluid	2oz.
5437	70 Weight Silicone Shock Fluid	2oz.
5438	47.5 Weight Silicone Shock Fluid	2oz.

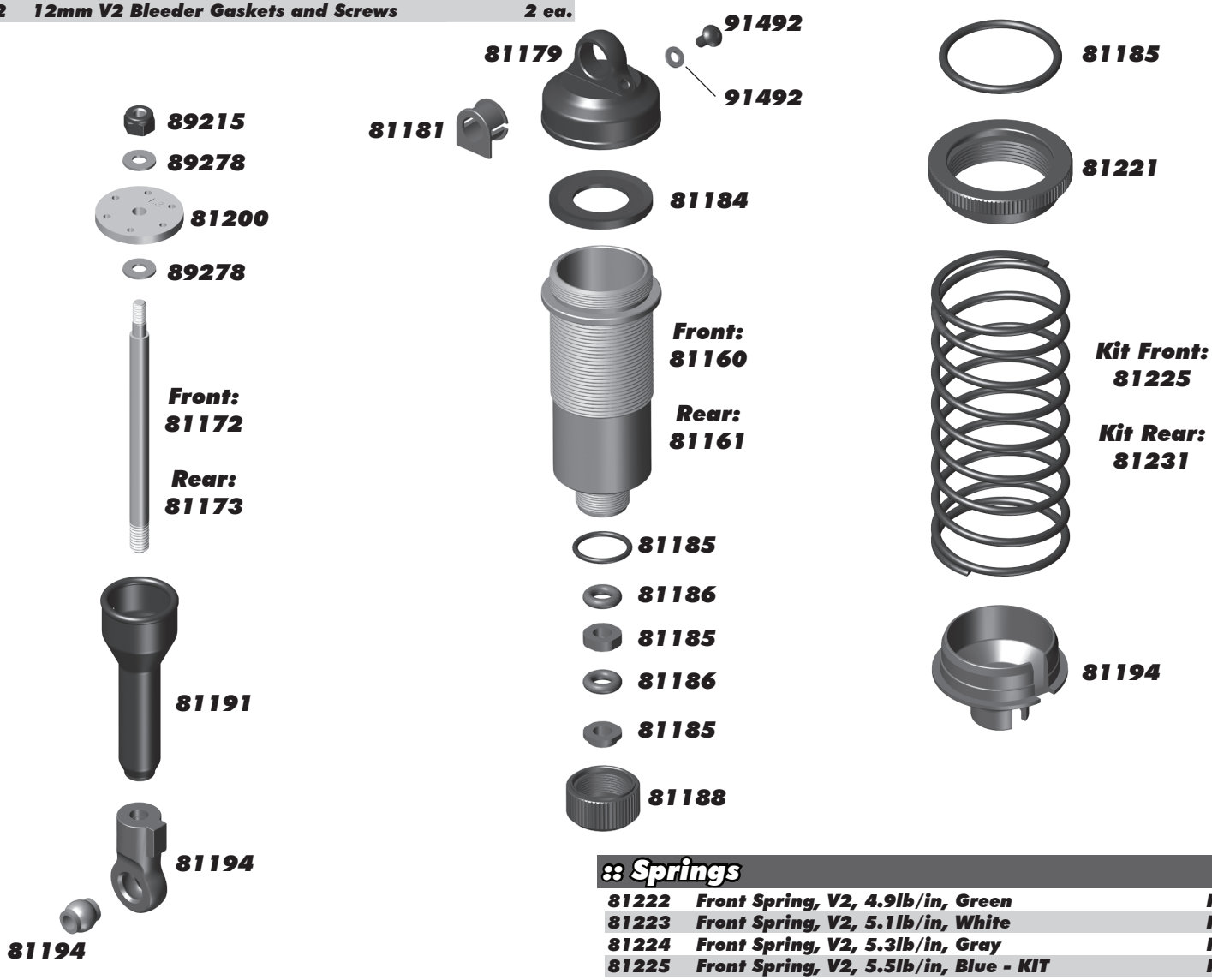

:: Springs

81222	Front Spring, V2, 4.9lb/in, Green	Pr.
81223	Front Spring, V2, 5.1lb/in, White	Pr.
81224	Front Spring, V2, 5.3lb/in, Gray	Pr.
81225	Front Spring, V2, 5.5lb/in, Blue - KIT	Pr.
81226	Front Spring, V2, 5.7lb/in, Yellow	Pr.
81229	Rear Spring, V2, 4.1lb/in, White	Pr.
81230	Rear Spring, V2, 4.2lb/in, Gray	Pr.
81231	Rear Spring, V2, 4.3lb/in, Blue - KIT	Pr.
81232	Rear Spring, V2, 4.4lb/in, Yellow	Pr.

:: Differential Fluids

5444	Silicone Diff Fluid 4,000CST	1
5446	Silicone Diff Fluid 6,000CST	1
5447	Silicone Diff Fluid 15,000CST	1
5448	Silicone Diff Fluid 80,000CST	1
5450	Silicone Diff Fluid 1,000CST	1
5451	Silicone Diff Fluid 2,000CST	1
5452	Silicone Diff Fluid 3,000CST	1
5453	Silicone Diff Fluid 5,000CST	1
5454	Silicone Diff Fluid 7,000CST	1
5455	Silicone Diff Fluid 10,000CST	1
5456	Silicone Diff Fluid 20,000CST	1
5457	Silicone Diff Fluid 30,000CST	1
5458	Silicone Diff Fluid 60,000CST	1
5459	Silicone Diff Fluid 100,000CST	1
5461	Silicone Diff Fluid 200,000CST	1
5463	Silicone Diff Fluid 500,000CST	1
5464	Silicone Diff Fluid 1,000,000CST	1

:: Front / Rear Gear Differential

81008	Diff Outdrives, 15mm, Rear Diff	2
81012	Diff Outdrives, 17mm, Front Diff	2
81014	RC8T3.1 Diff Ring Gear, 46T	1
81379	RC8B3.1 Differential Case	1
81380	RC8B3.1 Differential Gear Set (HTC) - KIT	1
81381	RC8B3.1 Differential Shim Set	1
81383	RC8B3.1 Differential Gear Set (LTC)	1
81384	RC8B3.1 Differential Gasket	3
81385	RC8B3.1 Differential O-Ring Set	1
89208	3 x 14mm FHCS	10
91564	8 x 16 x 5 Bearings	2

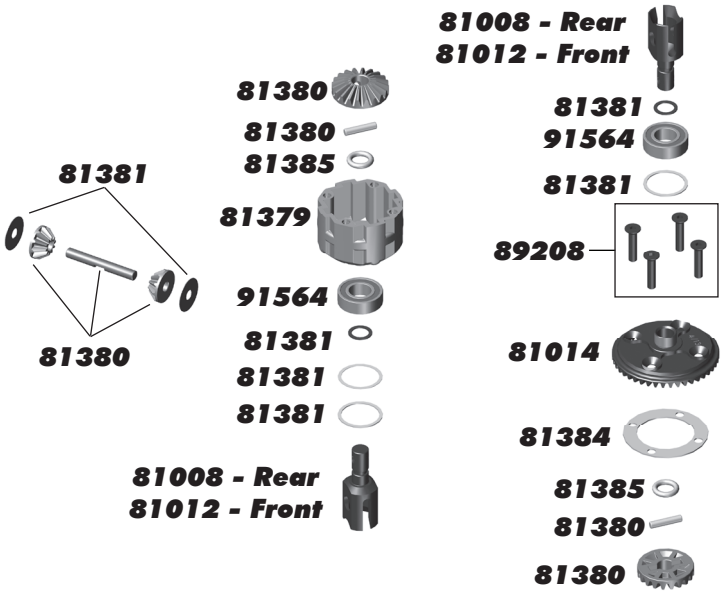

:: Center Gear Differential (RC8T3.1e)

81012	Diff Outdrives, 17mm, Center Diff	2
81379	RC8B3.1 Differential Case	1
81380	RC8B3.1 Differential Gear Set (HTC) - KIT	1
81381	RC8B3.1 Differential Shim Set	1
81383	RC8B3.1 Differential Gear Set (LTC)	1
81384	RC8B3.1 Differential Gasket	3
81385	RC8B3.1 Differential O-Ring Set	1
81389	RC8B3.1e Plastic Spur Gear, 46T - KIT	1
89208	3 x 14mm FHCS	10
91564	8 x 16 x 5 Bearings	2

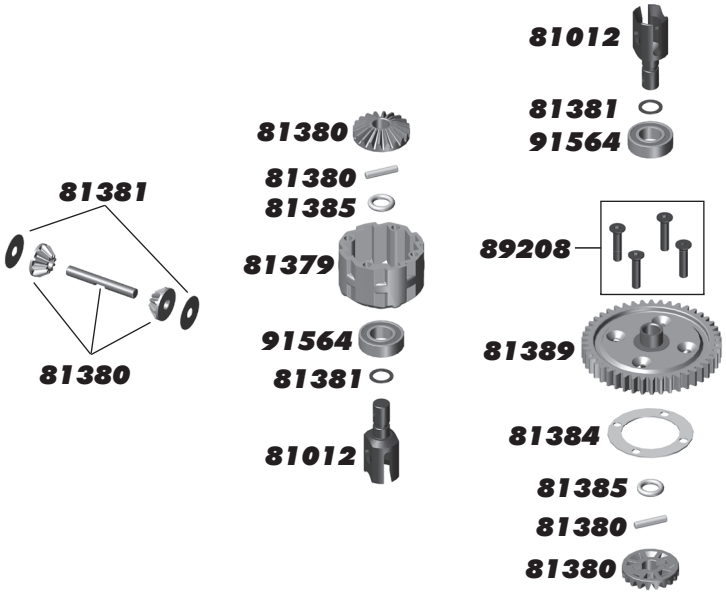

:: Center Gear Differential (RC8T3.1 Nitro)

81012	Diff Outdrives, 17mm, Center Diff	2
81379	RC8B3.1 Differential Case	1
81380	RC8B3.1 Differential Gear Set (HTC) - KIT	1
81381	RC8B3.1 Differential Shim Set	1
81383	RC8B3.1 Differential Gear Set (LTC)	1
81384	RC8B3.1 Differential Gasket	3
81385	RC8B3.1 Differential O-Ring Set	1
81386	RC8B3.1 Spur Gear, 46T - KIT	1
81387	RC8B3.1 Spur Gear, 47T	1
81388	RC8B3.1 Spur Gear, 48T	1
89208	3 x 14mm FHCS	10
91564	8 x 16 x 5 Bearings	2

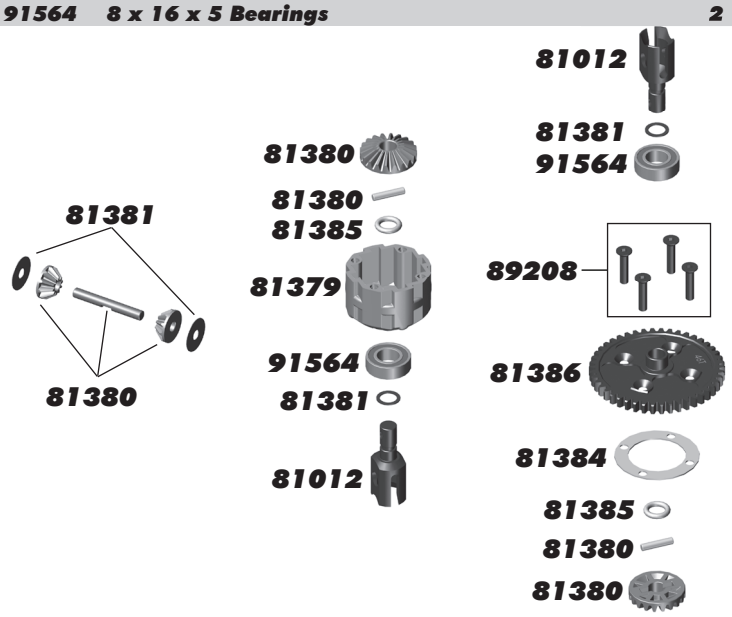

:: Center Bulkhead (RC8T3.1e)

25211	3 x 10mm BHCS	20
25224	M4 x 4mm Set Screw	20
31448	2.5 x 8mm FHCS	6
31532	3 x 8mm BHCS	6
81262	4 x 10mm FHCS	6
81299	RC8B3e Motor Mount	1
81300	RC8B3e Motor Mount Slide	1
81304	RC8B3e Center Bulkhead / Cover / Guide	1
89206	4 x 10mm BHCS	10
89512	Pinion, 12T	1
89513	Pinion, 13T	1
89514	Pinion, 14T	1
89515	Pinion, 15T	1
89516	Pinion, 16T	1
89517	Pinion, 17T	1
89593	Pinion, 18T	1
89594	Pinion, 19T	1
89595	Pinion, 20T	1

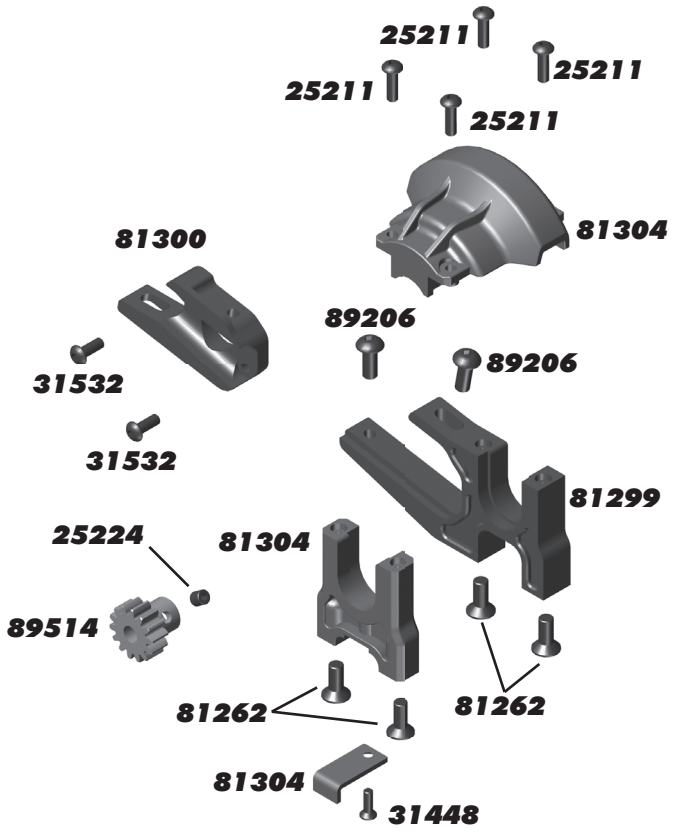

:: Center Bulkhead (RC8T3.1 Nitro)

4671	3 x 10mm Set Screw	6
25225	3 x 3mm Set Screw	20
31448	2.5 x 8mm FHCS	6
31531	3 x 6mm BHCS	6
81036	RC8B3 Center Bulkhead, 2 wide, 2 narrow	1
81037	RC8B3 Brake Rotor	2
81038	RC8B3 Brake Pad Spring	4
81039	RC8B3 Brake Pad, 2 inside, 2 outside, 4 springs	1
81040	RC8B3 Brake Cam	2
81042	RC8B3 Brake Lever	2
81043	RC8B3 Center Top Plate	1
81124	RC8B3 Air Filter, Boot, and Mount	1
81256	C-Clip, 5mm	6
89149	Brake Bolt	4
89214	4 x 12mm FHCS	10
89218	3 x 8mm Washer	10

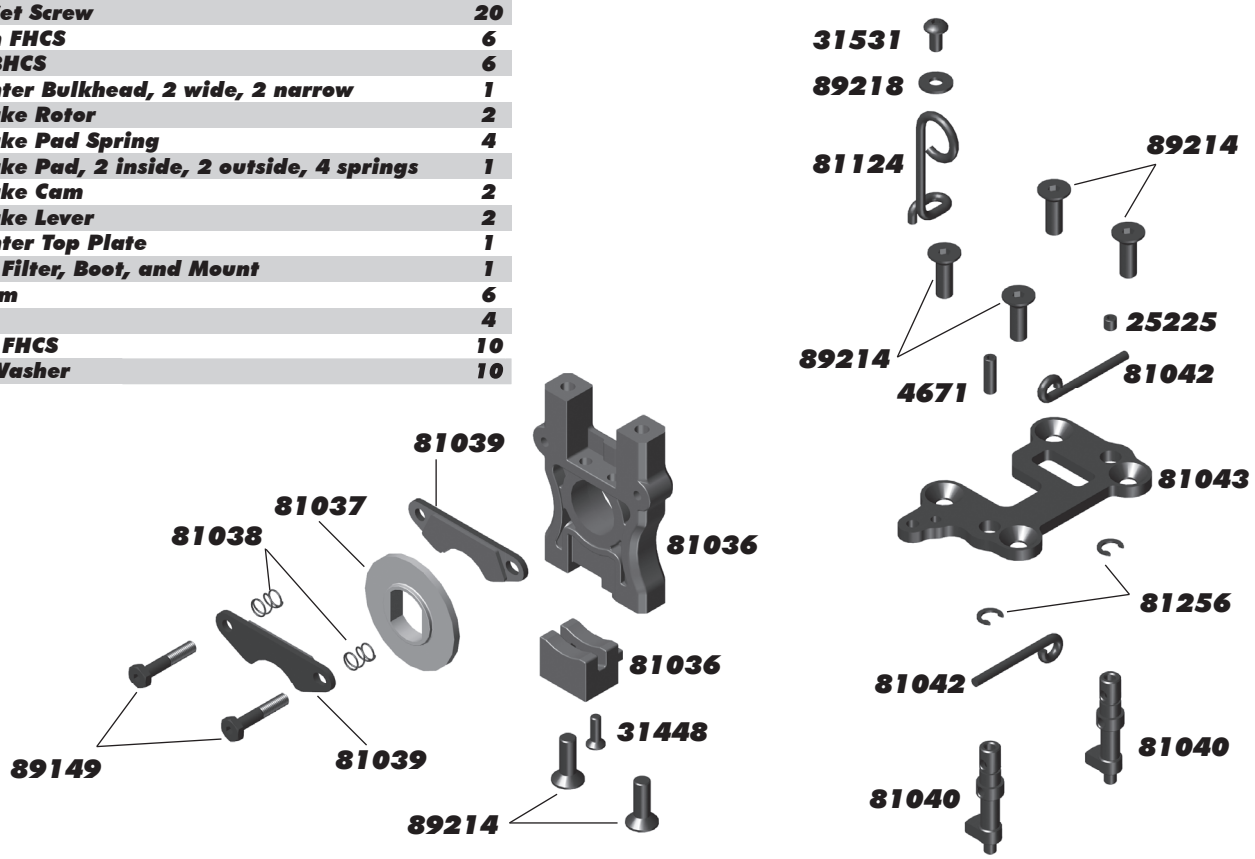

:: Front Gearbox

4675	2.5 x 6mm FHCS	6
25620	3 x 10mm SHCS	20
31521	2.5 x 8mm BHCS	6
81007	RC8B3 Diff Pinion Gear, 10T - V2	1
81015	RC8B3 Gearbox	2
81020	RC8B3 Center Universal, 76mm	1
81050	RC8B3 Arm Mount Insert	12 ea.
81060	RC8B3 Hinge Pin Set	1
81113	RC8B3 Front Bumper	1
81257	3 x 6mm Set Screw	6
81259	2.5 x 18mm BHCS	6
81260	4 x 14mm BHCS	6
81264	4 x 20mm FHCS	6
81291	RC8B3.1 Arm Mount, A	1
81292	RC8B3.1 Arm Mount, B	1
81316	RC8T3 Front Arms/Shims	Pr.
89214	4 x 12mm FHCS	10
89221	5 x 4mm Set Screw	10
91561	Bearing, 6 x 12 x 4mm	2

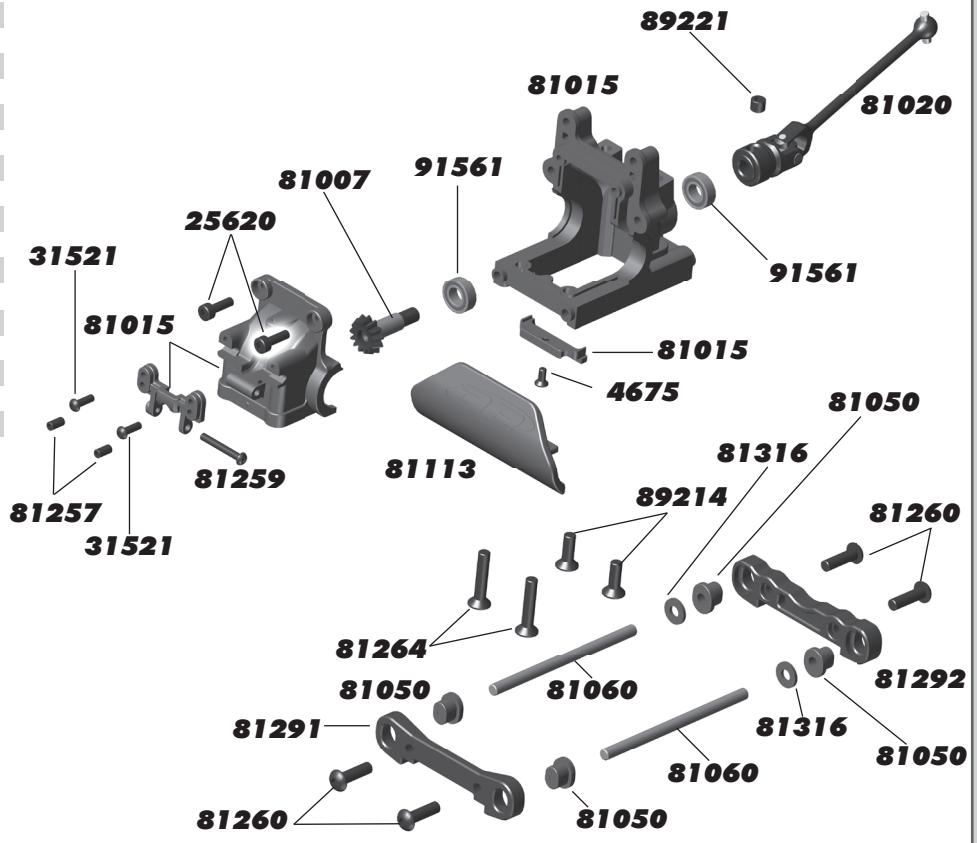

:: Rear Gearbox

4675	2.5 x 6mm FHCS	6
25620	3 x 10mm SHCS	20
31521	2.5 x 8mm BHCS	6
81007	RC8B3 Diff Pinion Gear, 10T - V2	1
81015	RC8B3 Gearbox	2
81023	Center Universal, 165mm	1
81050	RC8B3 Arm Mount Insert	12 ea.
81060	RC8B3 Hinge Pin Set	1
81257	3 x 6mm Set Screw	6
81259	2.5 x 18mm BHCS	6
81261	4 x 16mm BHCS	6
81264	4 x 20mm FHCS	6
81293	RC8B3 Arm Mount C, HRC	1
81294	RC8B3 Arm Mount D, HRC	1
81318	RC8T3 Rear Arms/Shims	Pr.
89214	4 x 12mm FHCS	10
89221	5 x 4mm Set Screw	10
91561	FT Bearing, 6 x 12 x 4mm	2

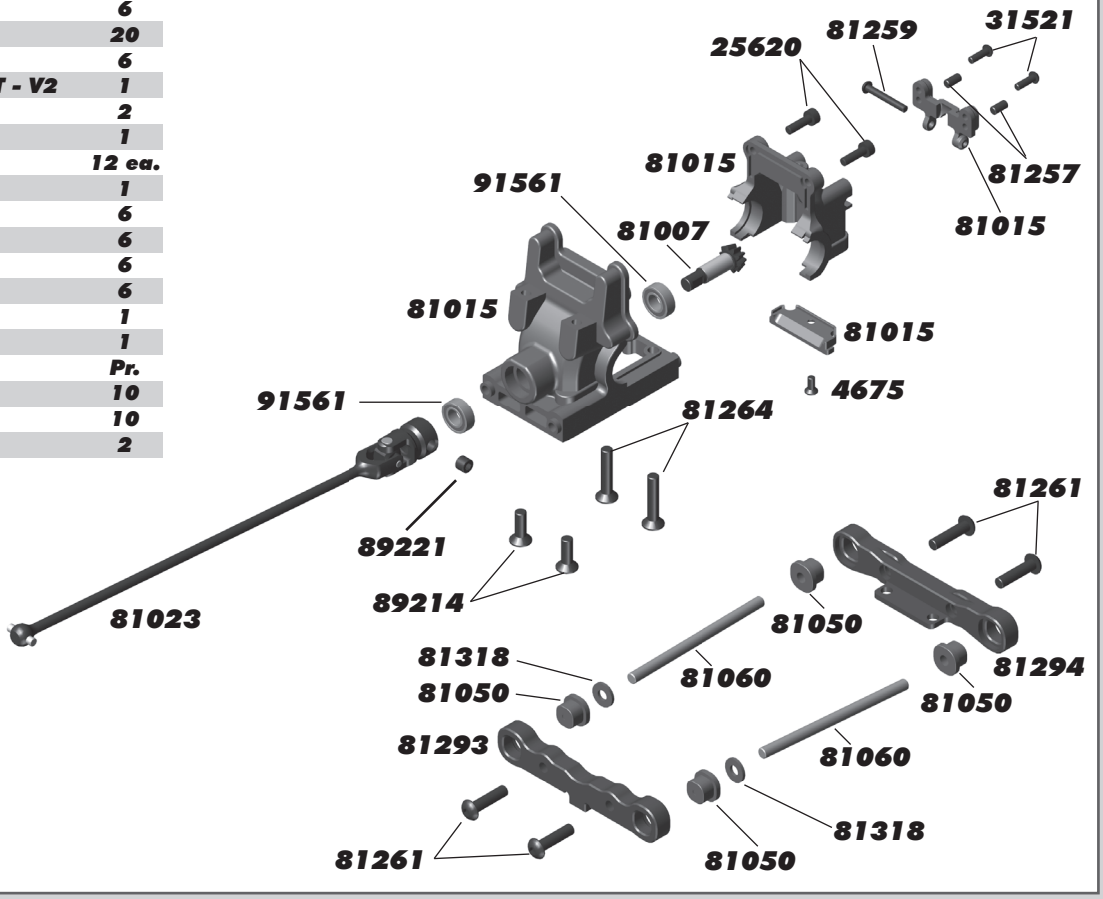

:: Steering

8680	FT Steering Bearing Set, 5 x 8 x 2.5mm & 6 x 10 x 3mm	4 ea.
25201	3 x 8mm FHCS	20
25211	3 x 10mm BHCS	20
31404	Bearing, 6 x 10 x 3mm	4
81083	Servo Saver Spring	1
81084	RC8B3.1 Servo Saver Tube	1
81086	RC8B3 Steering Bellcrank	1
81088	RC8B3 Steering Bellcrank Nut	2
81089	RC8B3 Steering Rack	1
81091	RC8B3 Steering Post	2
81262	4 x 10mm FHCS	10
81397	Turnbuckle Ball, 4mm	4

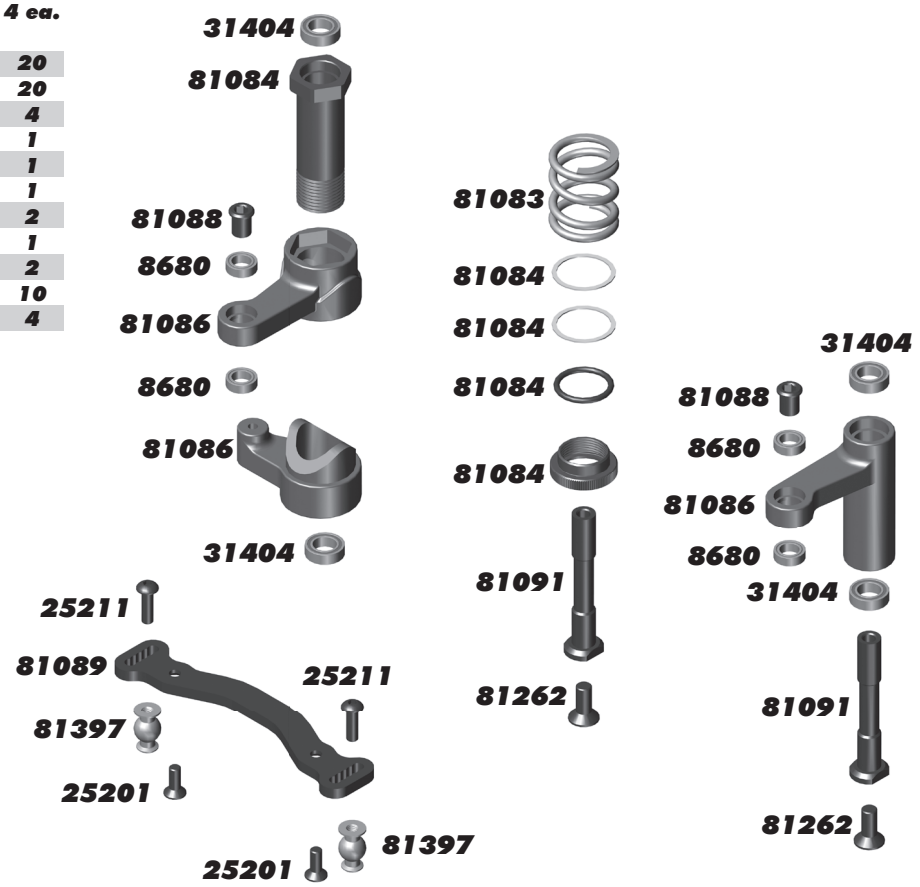

:: Front Shock Tower

2208	Large Hood Pins	6
25612	M3 Locknut with Flange, Black	20
81050	RC8B3 Arm Mount Inserts	12 ea.
81196	RC8B3 Shock Bushing	4
81312	RC8T3 Shock Tower, Front	1
81323	RC8T3 Body Posts, Set	1
89208	3 x14mm FHCS	10
89214	4 x 12mm FHCS	10
89225	3 x 24mm SHCS	10

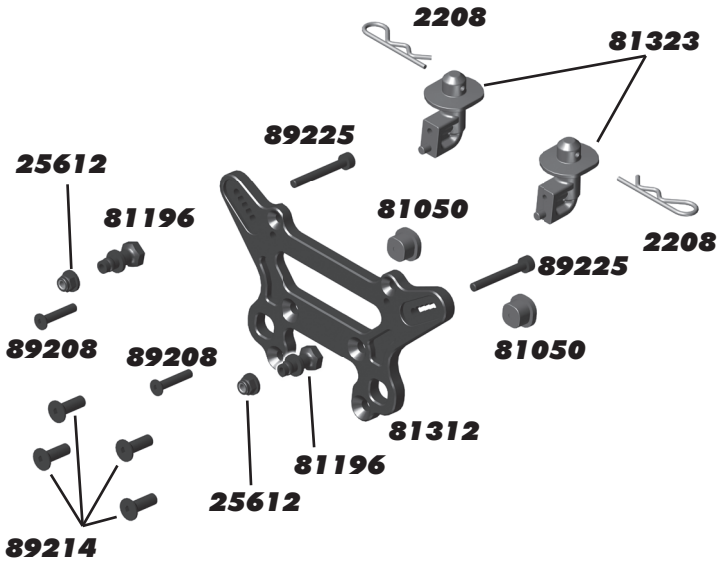

:: Rear Shock Tower

2208	Large Hood Pins	6
25203	3 x 12mm FHCS	20
25211	3 x 10mm BHCS	20
25612	M3 Locknut with Flange, Black	20
81196	RC8B3 Shock Bushing	4
81313	RC8T3 Shock Tower, Rear	1
81323	RC8T3 Body Posts, Set	1
89214	4 x 12mm FHCS	10
89225	3 x 24mm SHCS	10

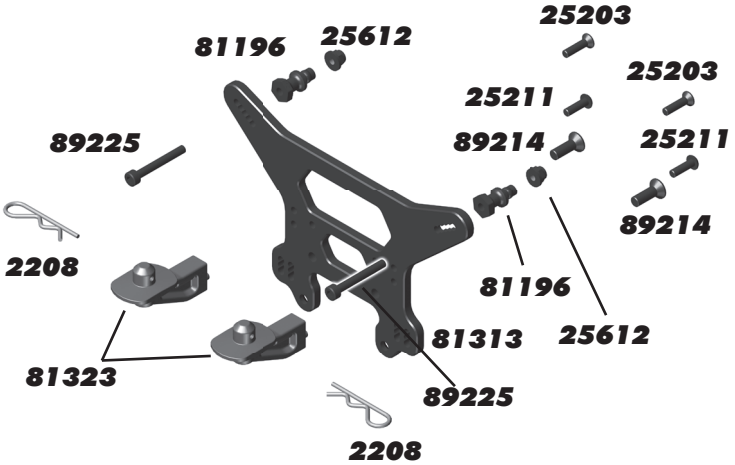

:: Front Suspension

25202	3 x 10mm FHCS	20
25211	3 x 10mm BHCS	20
25225	3 x 3mm Set Screw	20
81056	RC8B3 Suspension Arm Endcap	4
81060	RC8B3 Hinge Pin Set	1
81063	Steering Block Arms, +2 deg., alum.	Pr.
81065	RC8B3 Steering Block	Pr.
81067	RC8B3 Pillow Ball	2
81070	RC8B3 Pillow Ball Nut	4
81072	RC8B3 Pillow Ball Shim	6
81082	RC8B3 Wheel Nuts, 17mm Blue	2
81093	RC8B3 Rod End, 4mm (4 ball joints, 2 rod ends, 2 offset rod ends)	1
81197	RC8B3 Shock Pin	4
81257	3 x 6mm Set Screw	6
81316	RC8T3 Front Arm and Shims	Pr.
81317	RC8T3 Front Upper Arms and Clips	Pr.
81319	17mm Hex Drives, 11.5mm Offset	2
81320	4 x 85mm Turnbuckle	2
81326	RC8B3 CVA Axle, Steel	2
81328	FT RC8B3 CVA Rebuild Kit	2
81331	RC8T3 CVA Bones, 133mm	2
89096	Wheel Hex Pin	4
89203	3 x 16mm BHCS	10
89221	5 x 4mm Set Screw	10
89317	Droop Screw	8
91565	FT Flanged Bearing, 8 x 16 x 5	4
91566	FT Bearings, 15 x 21 x 4mm	4

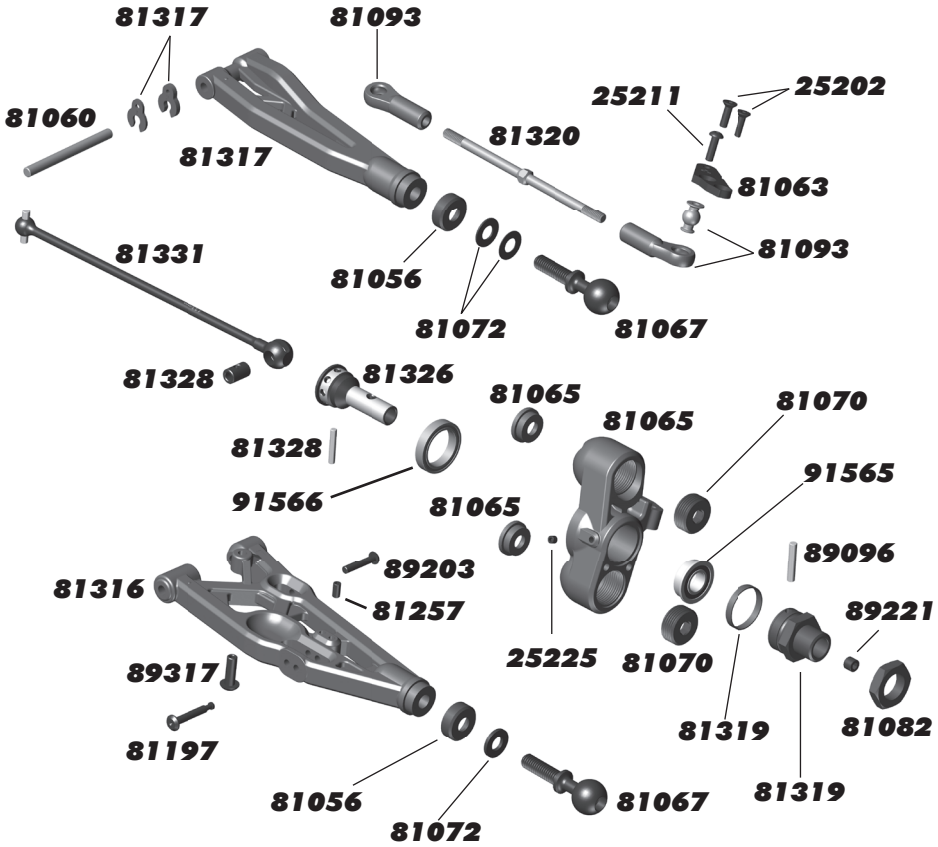

:: Rear Suspension

25225	3 x 3mm Set Screw	20
25612	M3 Locknut with Flange, Black	20
81075	RC8B3 Rear Hub	Pr.
81076	RC8B3 Hub Hinge Pin	2
81082	RC8B3 Wheel Nuts, 17mm Blue	2
81094	RC8B3 Rod End, 5mm (4 ball joints, 2 rod ends, 2 offset rod ends)	1
81197	RC8B3 Shock Pin	4
81257	3 x 6mm Set Screw	6
81318	RC8T3 Rear Arms	Pr.
81319	17mm Hex Drives, 11.5mm Offset	2
81321	Turnbuckle, 5 x 80mm	2
81326	RC8B3 CVA Axle, Steel	2
81328	FT RC8B3 CVA Rebuild Kit	2
81331	RC8T3 CVA Bones, 133mm	2
89096	Wheel Hex Pin	4
89203	3 x 16mm BHCS	10
89204	3 x 24mm BHCS	10
89221	5 x 4mm Set Screw	10
89317	Droop Screw	8
91565	FT Flanged Bearing, 8 x 16 x 5	4
91566	FT Bearings, 15 x 21 x 4mm	4

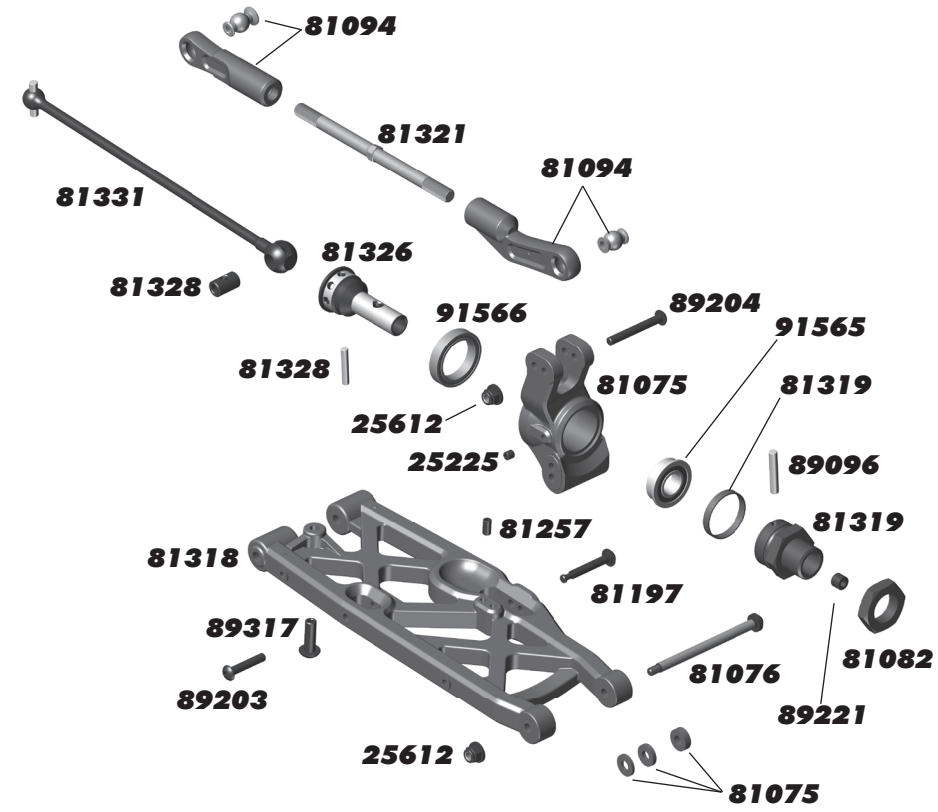

:: Radio Tray / Servo Linkage (RC8T3.1e)

1401	FT Ti Turnbuckle, 33mm	2
6338	Antenna Tube with Cap, Black	1
9907	Receiver Box Grommets	2
25187	3 x 14mm BHCS	20
25202	3 x 10mm FHCS	20
25215	M3 Locknut, Black	20
25225	3 x 3mm Set Screw	20
31386	Bulkhead Washers, 7.8x2.0mm	10
31448	2.5 x 8mm BHCS	6
81250	RC8B3 Servo Horns	1
81262	4 x 10mm FHCS	6
81303	RC8B3e Servo/Receiver Box	1
89023	Servo Mount Spacers Set	1
89218	Washers, 3 x 8mm	10
91048	HD Ballstuds, 8mm	8
91050	HD Ballstuds, 12mm	8
91453	HD Ball Cup Set, Small	1

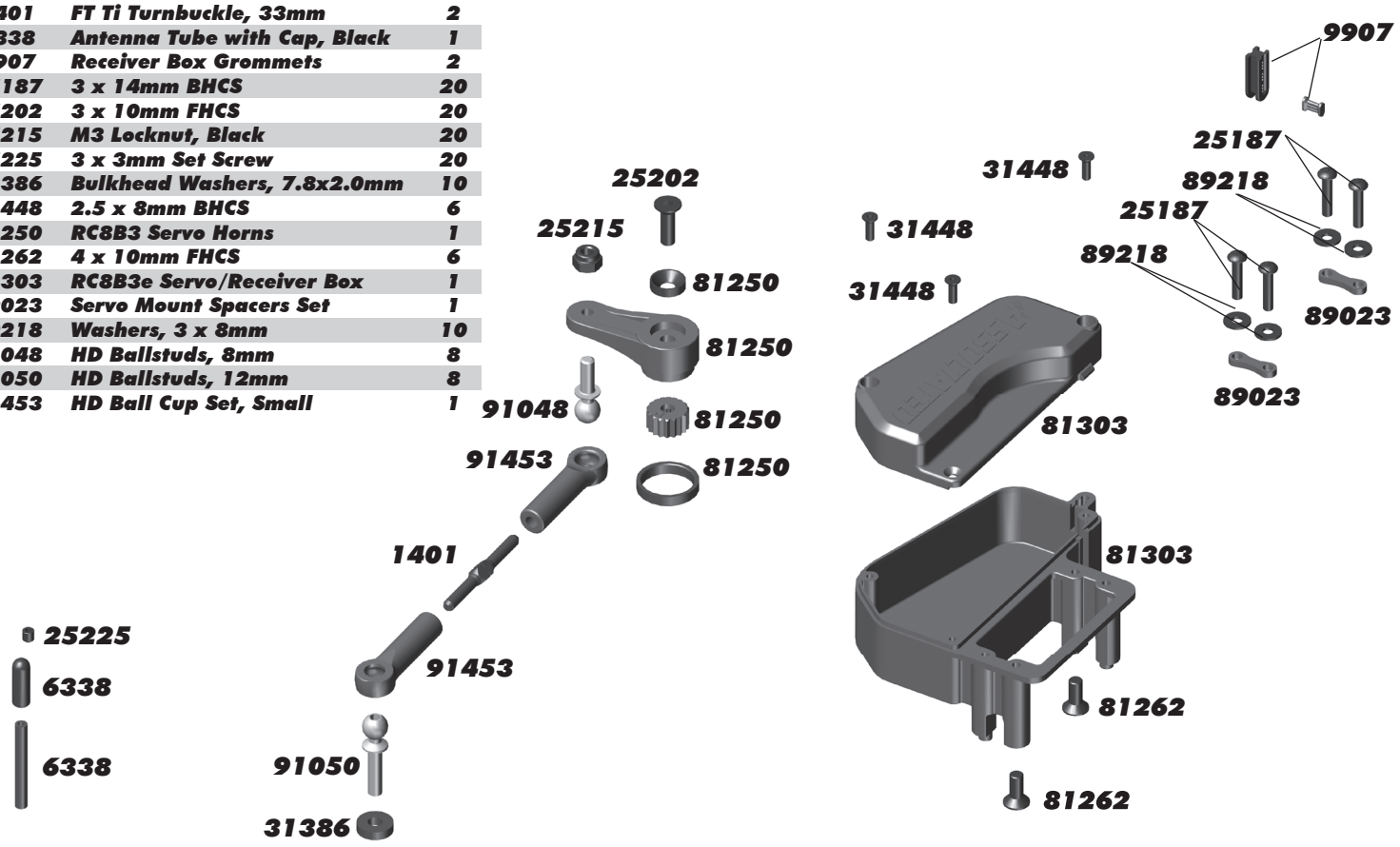

:: Battery Tray (RC8T3.1e)

81262	4 x 10mm FHCS	6
81263	4 x 16mm FHCS	6
81297	RC8B3e Battery Tray	1
81298	RC8B3e Battery Foams	1
89506	Hook and Loop Fastener Battery Strap	3

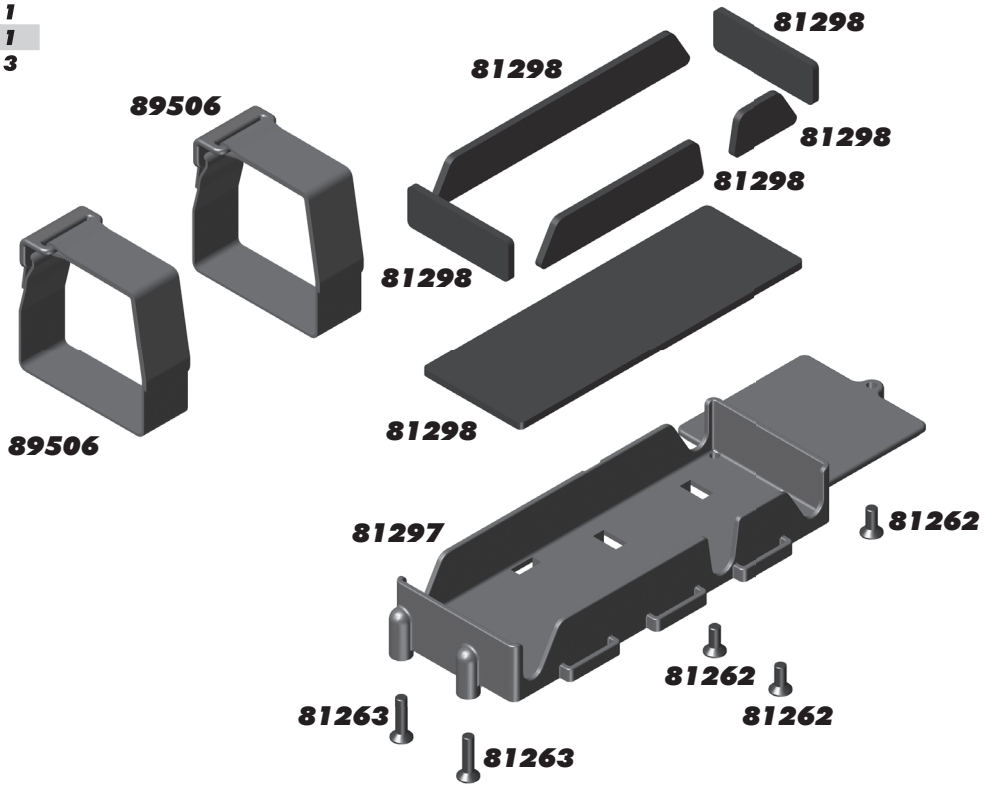

:: Radio Tray (RC8T3.1 Nitro)

6338	Antenna Tube with Cap, Black	1
9907	Receiver Box Grommets	2 ea.
25187	3 x 14mm BHCS	20
25201	3 x 8mm FHCS	20
25225	3 x 3mm Set Screw	20
31448	2.5 x 8mm FHCS	6
31531	3 x 6mm BHCS	6
81100	RC8B3 Radio Tray	1
81102	RC8B3 Receiver Box	1
81103	RC8B3 Receiver Battery Tray	1
89023	Servo Mount Spacers	1
89214	4 x 12mm FHCS	10
89218	3 x 8mm Washer	10

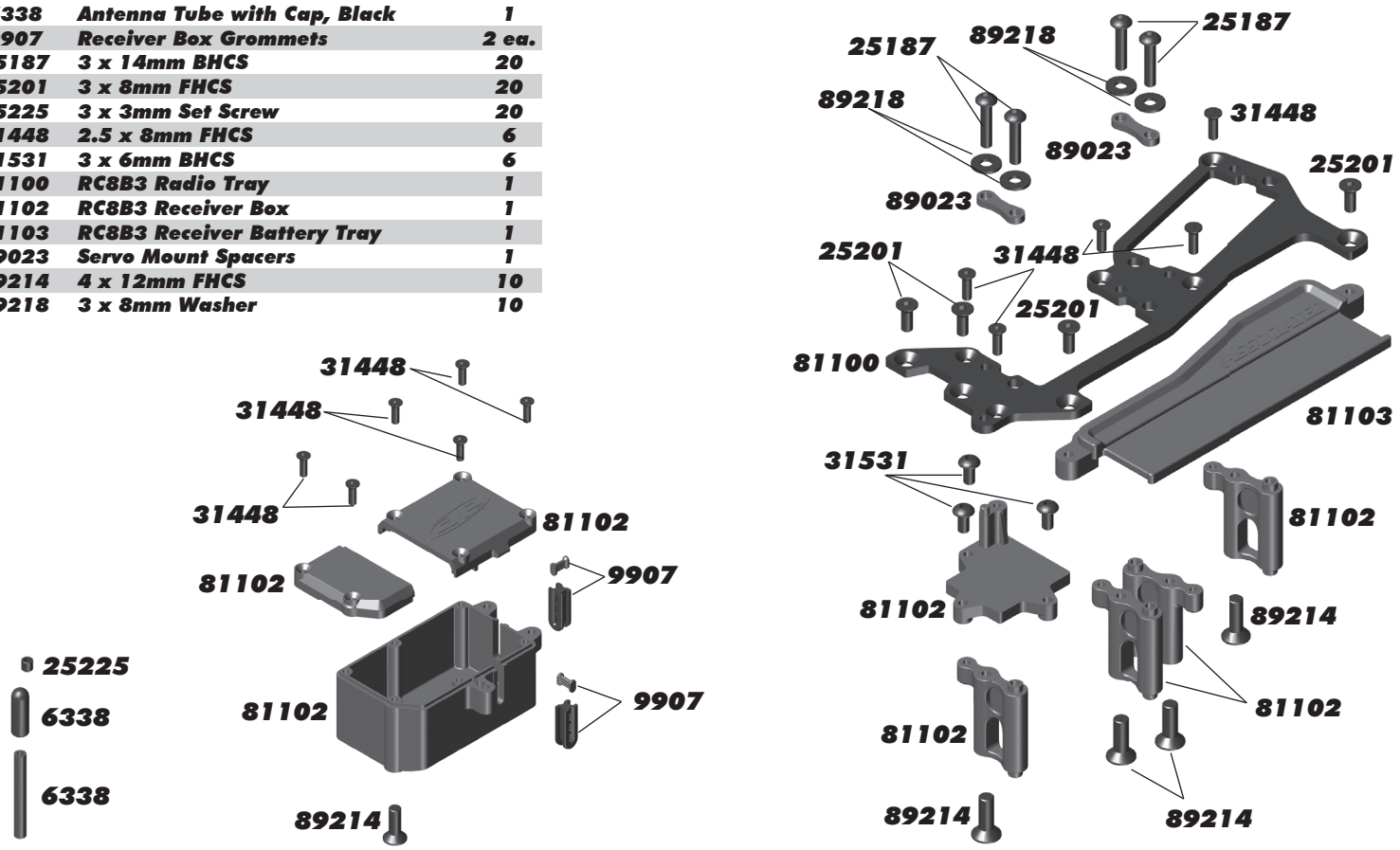

:: Linkage (RC8T3.1 Nitro)

1409	FT Ti Turnbuckle, 25.5mm	2
8427	.018" Spring	2
8429	.020" Spring	2
8431	.022" Spring	2
8433	.024" Spring - KIT	2
25201	3 x 8mm FHCS	20
25202	3 x 10mm FHCS	20
25215	M3 Locknut, Black	20
25225	3 x 3mm Set Screw	20
31386	Bulkhead Washers, 7.8x2.0mm	10
81250	RC8B3 Servo Horns	1
81251	RC8B3 Linkage Set	1
91048	HD Ballstuds, 8mm	8
91050	HD Ballstuds, 12mm	8
91453	HD Ball Cup Set, Small	1

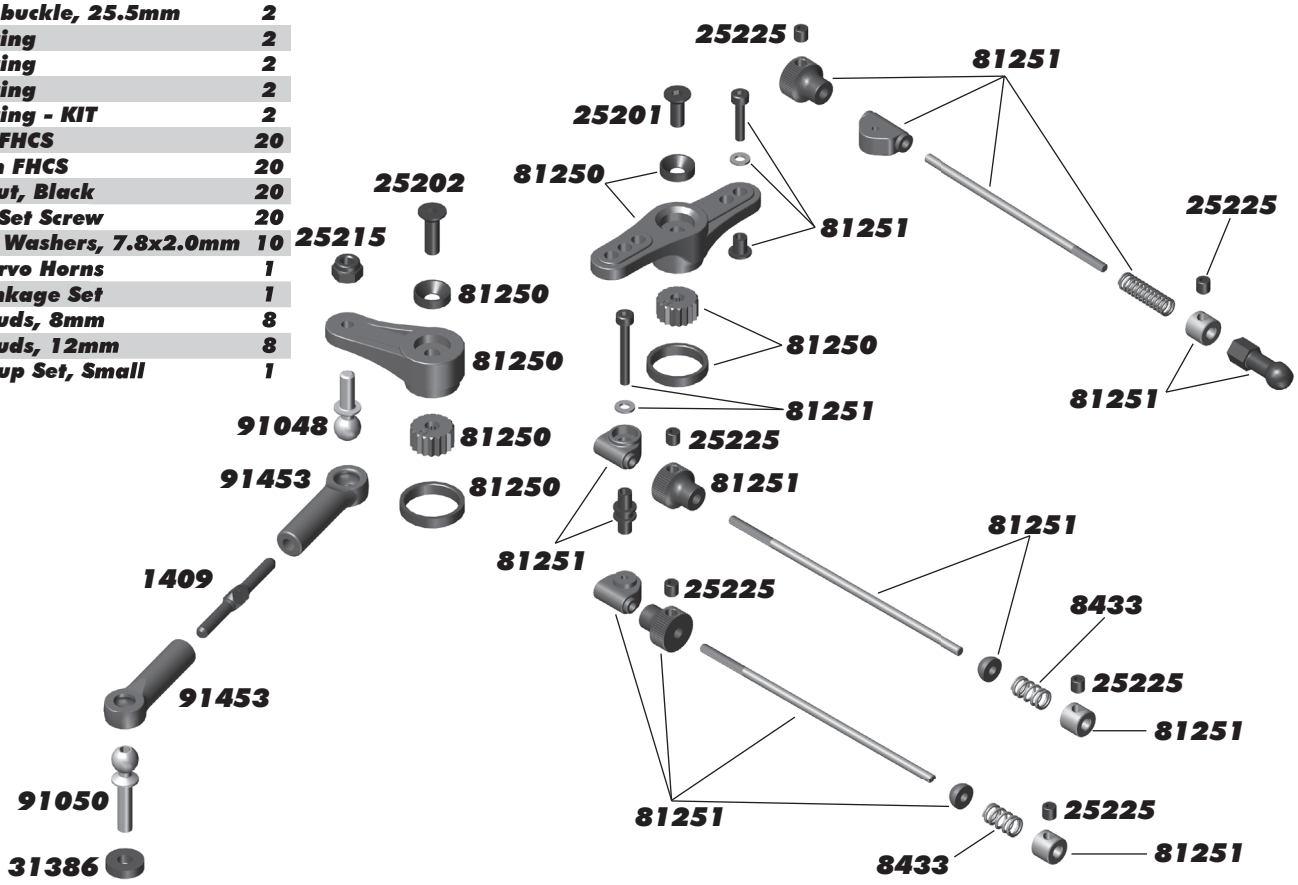

:: Front Chassis Brace

25201	3 x 8mm FHCS	20
81030	RC8B3 Top Plate	1
81032	RC8B3 Chassis Brace	Pr.
81049	RC8B3 Upper Link Mount	1
81050	RC8B3 Arm Mount Insert	12 ea.
81262	4 x 10mm FHCS	6
89214	4 x 12mm FHCS	10
89216	M4 Locknut	10

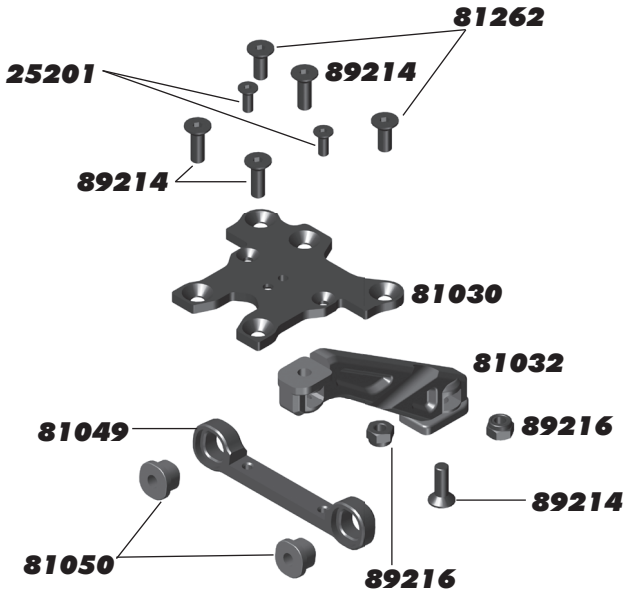

:: Rear Chassis Brace

25188	3 x 20mm BHCS	20
25215	M3 Locknut, Black	20
81032	RC8B3 Chassis Brace	Pr.
89214	4 x 12mm FHCS	10
89216	M4 Locknut	10

:: Anti-Roll Bars

25225	3 x 3mm Set Screw	20
81130	RC8B3 Front Anti-Roll Bars, (2.3 - Black, 2.4 - Green, 2.5 - White)	1 ea.
81131	RC8B3 Front Anti-Roll Bars, (2.6 - Gray, 2.7 - Blue, 2.8 - Yellow	1 ea.
81140	RC8B3 Rear Anti-Roll Bars, (2.5 - White, 2.6 - Gray, 2.7 - Blue)	1 ea.
81141	RC8B3 Rear Anti-Roll Bars, (2.8 - Yellow, 2.9 - Red, 3.0 - Orange)	1 ea.
81150	RC8B3 Anti-Roll Bar Drop Link / Collet	1
81258	3 x 12mm Set Screw	6

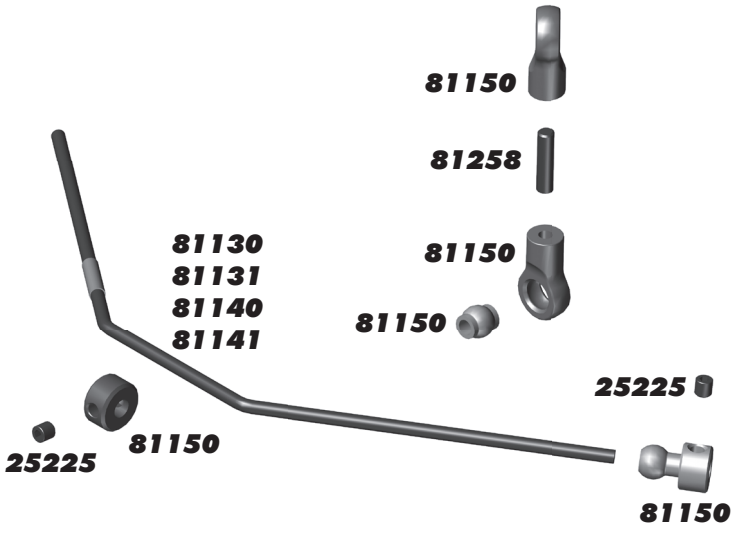

:: Wing

25187	3 x 14mm BHCS	20
25203	3 x 12mm FHCS	20
25215	M3 Locknut, Black	20
81106	RC8B3 Wing, Black (1 wing, 2 wing buttons)	1
81108	RC8B3 Wing Mount, 1 low	1
81109	RC8B3 Wing Mount, high (+8mm)	1
81263	4 x 16mm FHCS	6

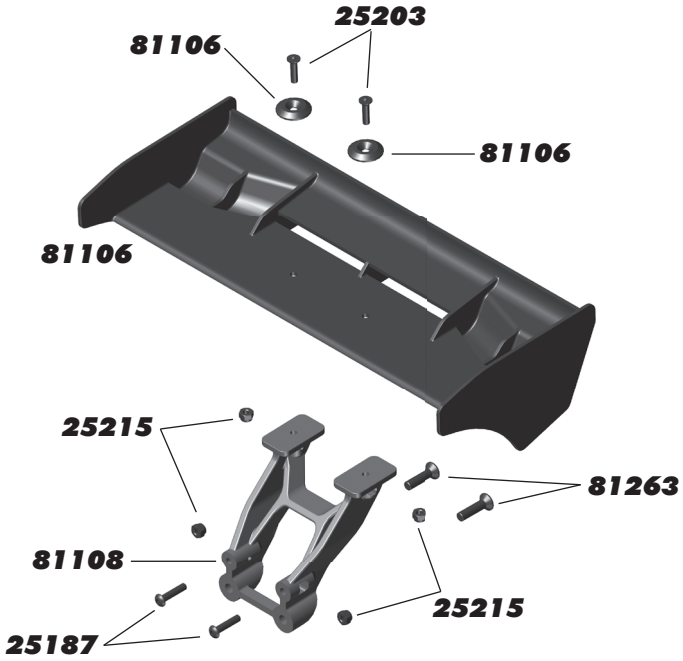

:: Clutch (RC8T3.1 Nitro)

81365	Clutch Springs (0.90, 4 Shoe) - KIT	4
81366	Clutch Springs (0.95, 4 Shoe) - KIT	4
81367	Clutch Springs (1.00, 4 Shoe)	4
81368	Clutch Springs (1.05, 4 Shoe)	4
81369	Clutch Springs (1.10, 4 Shoe)	4
81370	RC8B3.1 Flywheel (4 Shoe)	1
81371	RC8B3.1 Flywheel Collet (4 Shoe)	2
81372	RC8B3.1 Flywheel Nut (4 Shoe)	1
81373	Clutch Shoe Pins (4 Shoe)	4
81374	Clutch Bell (13T, Vented, 4 Shoe)	1
81375	Clutch Shoe, Hard (4 Shoe) - KIT	2
81377	Clutch Shoe, Composite Hard (4 Shoe)	2
81402	Clutch Shoe, Composite (4 Shoe) - KIT	2
89148	Clutch Bell Shim Set	1
89218	3 x 8mm Washer	10
89223	3 x 8mm SHCS	10
91560	5 x 10 x 4mm Bearing	2

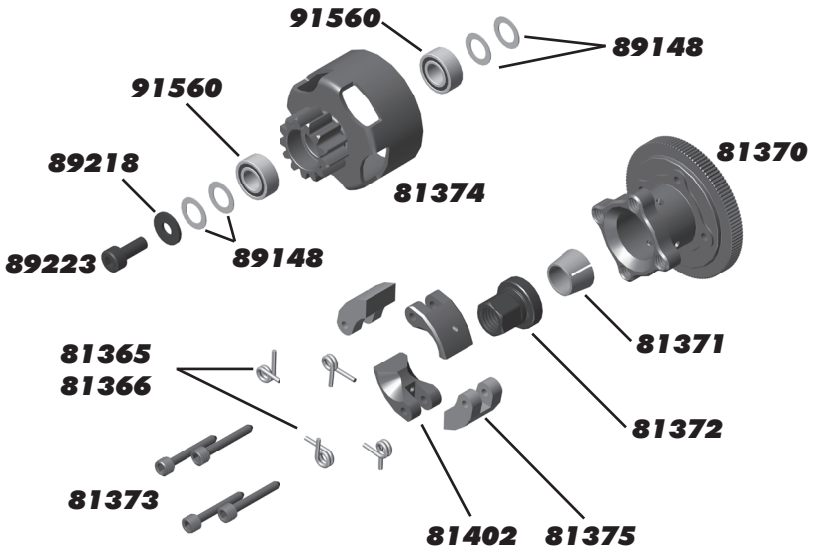

:: Air Filter (RC8T3.1 Nitro)

2208	Large Hood Pins	6
3719	Nylon Wire Tie, 6"	12
25620	3 x 10mm SHCS	20
81124	RC8B3 Air Filter & Boot	1
81125	RC8B3 Air Filter Element	1

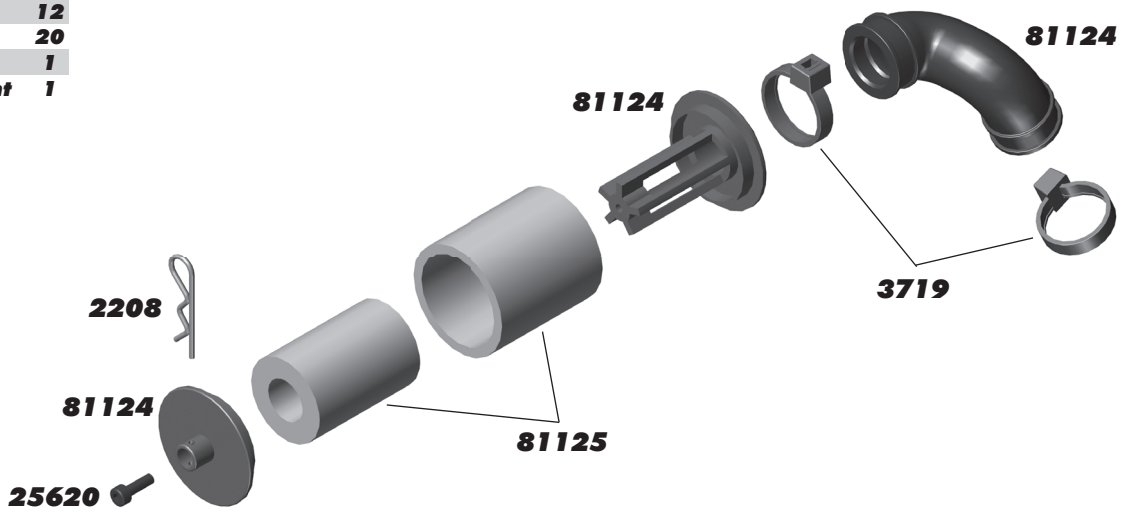

:: Fuel Tank (RC8T3.1 Nitro)

3719	Nylon Wire Tie, 6"	1
25211	3 x 10mm BHCS	20
31520	2.5 x 6mm BHCS	6
81122	RC8B3 Tank Post / Grommet	2 ea.
81262	4 x 10mm FHCS	6
81322	RC8T3 Fuel Tank	1
89218	3 x 8mm Washer	10

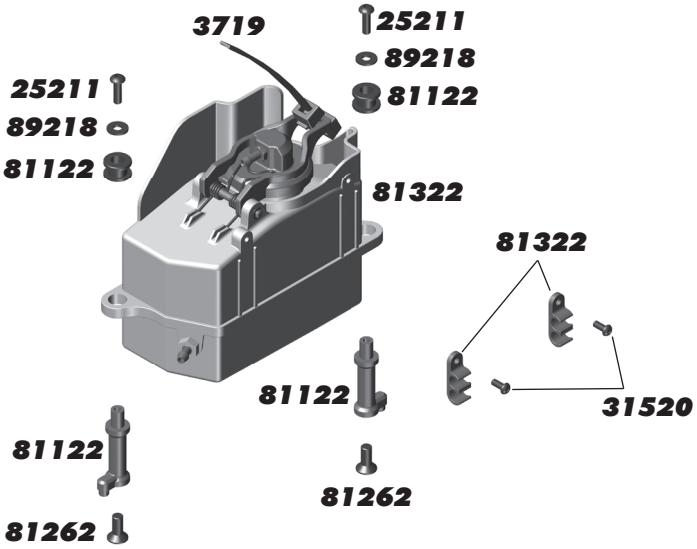

:: Chassis (RC8T3.1e)

25201	3 x 8mm FHCS	20
31541	3 x 6mm FHCS	6
81001	RC8B3 Side Guards	Pr.
81311	RC8T3e Chassis	1

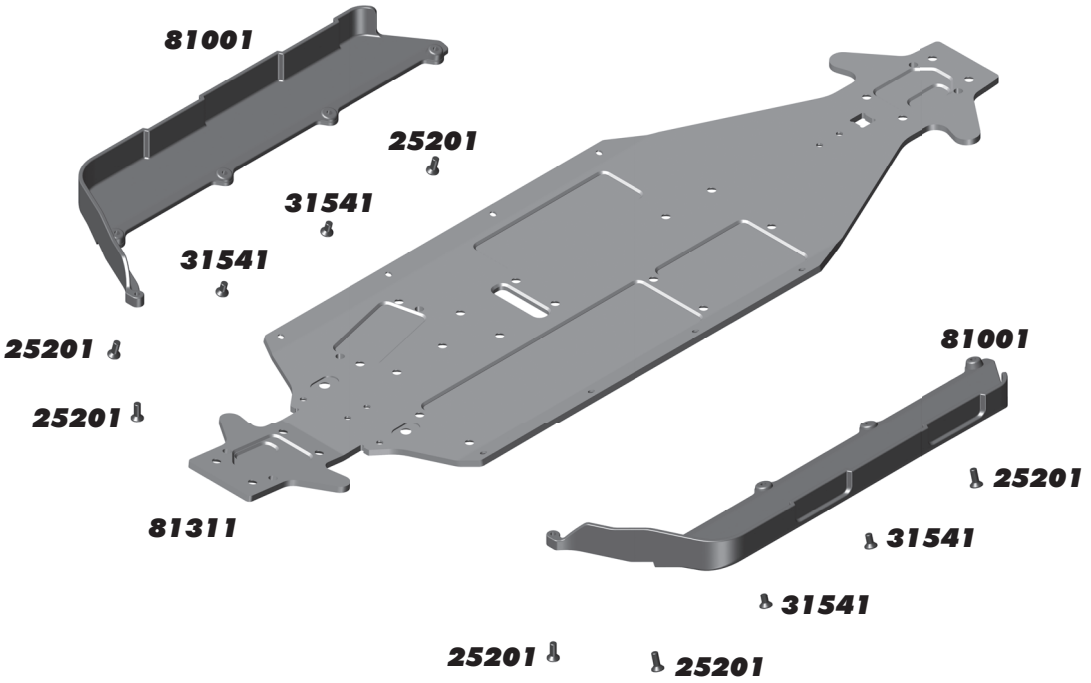

:: Chassis (RC8T3.1 Nitro)

7732	4 x 4mm Set Screw	6
25201	3 x 8mm FHCS	20
25620	3 x 10mm SHCS	20
31541	3 x 6mm FHCS	6
81001	RC8B3 Side Guards	Pr.
81114	RC8B3 Engine Mount Washers	4
81115	RC8B3 Engine Mount	Pr.
81118	RC8B3 Pipe Mount	1
81262	4 x 10mm FHCS	6
81310	RC8T3 Chassis	1

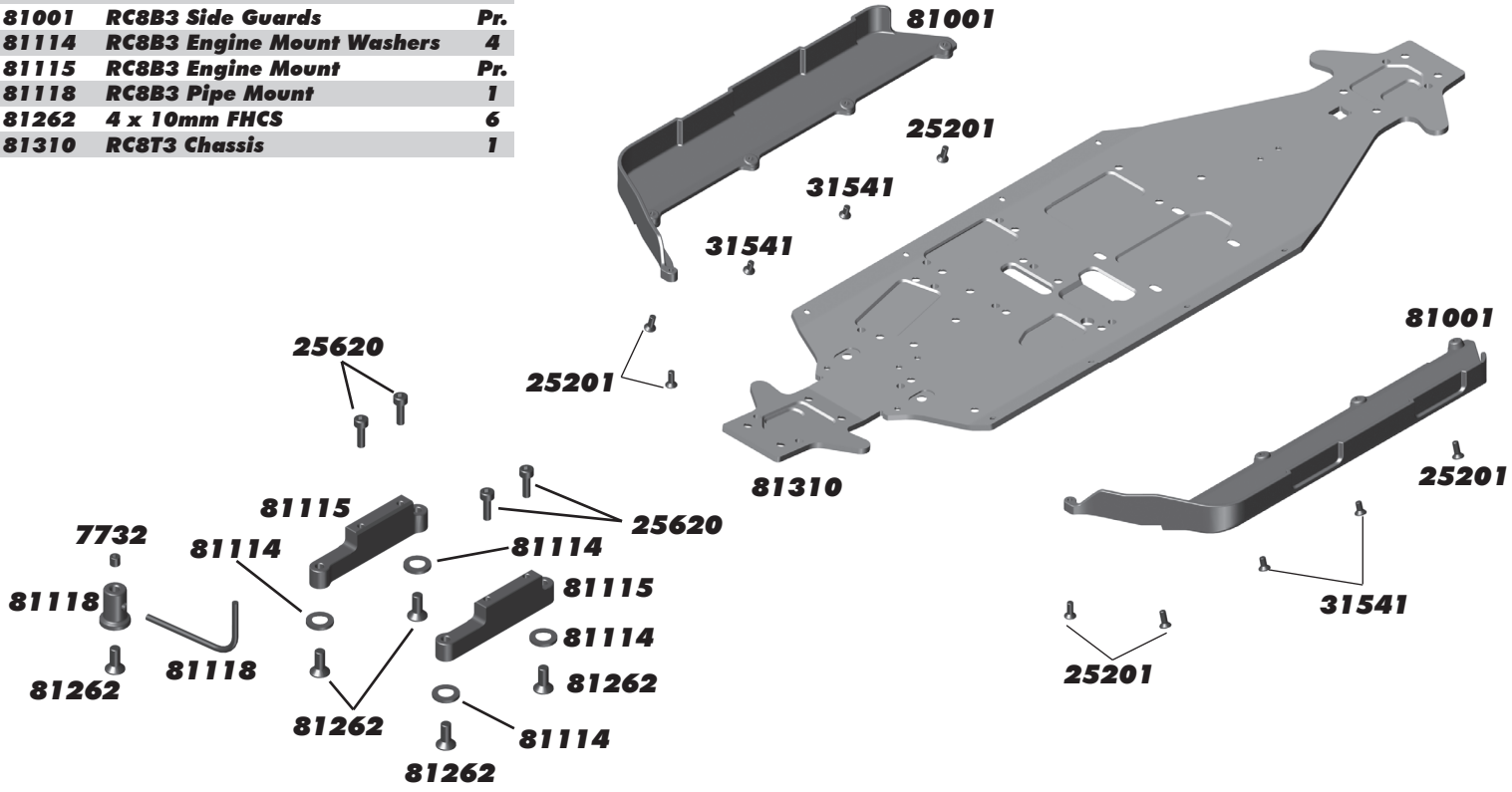

:: Factory Team and Option Parts

2357	Rear Exhaust Manifold Springs	2
7733	Exhaust Tubing Coupler	1
25094	Exhaust Manifold Springs	2
25392	3mm Blue Locknut, Flanged	10
27128	Servo Washers, aluminum, black	4
29213	Servo Wire Extension, 3"	1
31550	M3 Aluminum Lock Nut	6
81064	FT RC8B3 Graphite Steering Block Arms, +2 deg.	Pr.
81068	Factory Team Aluminum Pillow Balls	2
81077	Factory Team Aluminum Rear Hubs	Pr.
81085	Servo Saver Arm, aluminum	1
81092	FT Aluminum Steering Bellcrank Posts	2
81116	RC8B3 FT Engine Mount Base	1
81117	RC8B3 FT Engine Mounts	Pr.
81301	RC8B3 Chassis Braces, short (front and rear)	1
81327	Factory Team RC8B3 Aluminum CVA Axle	2
81396	Clutch Bell 14T, vented, 4 shoe	1
81405	RC8B3.1 FT Chassis Weight, 15g	1
81406	RC8B3.1 FT Chassis Weight, 30g	1
81407	RC8B3.1 Shock Seal Bushing Set	4 ea.
81410	RC8B3.1 Shock Bushings, blue aluminum	4
81413	RC8B3 FT Rigid Engine Mount	1
89094	Nyloc Wheel Hex Nuts, Blue	2
89123	RC8 Heatsink Brake Disc	2
89147	Header Gasket	4
89405	Nyloc Wheel Nuts (Silver)	4
89406	Nyloc Wheel Nuts (Black)	4
92100	FT Aluminum Wing Buttons	2

:: Reedy Batteries / Chargers

	Batteries	
302	AA Alkaline 1.5V (4)	1
304	LiPo Pro TX/RX Battery 1600mAh 7.4V Flat	1
305	LiFe Pro TX/RX Battery 1300mAh 6.6V Flat	1
324	LiPo 20C 2100mAh 14.8V Starter Box	1
325	LiPo 55C 5200mAh 14.8V	1
613	NiMH RX Battery 1600mAh 6.0V Flat	1
636	6.0V 5A Voltage Regulator	1
756	Wolfpack LiPo 4000mAh 35C 14.8V w/T-Plug	1
757	Wolfpack LiPo 5400mAh 30C 14.8V w/T-Plug	1
27312	Zappers LiPo 100C 6400mAh 15.2V	1
27313	LiPo Pro TX/RX 2400mAh 7.4V Flat	1
27315	LiFe Pro TX/RX 1600mAh 6.6V Flat	1
27327	Zappers SG HV-LiPo 110C 5200mAh 15.2V LP	1
27328	Zappers SG HV-LiPo 110C 6400mAh 15.2V	1
	Charger	
27200	1216-C2 Dual AC/DC Comp. Battery Charger	1
27200CN	1216-C2 Dual AC/DC Comp. Charger - CHN Plug	1
27200EU	1216-C2 Dual AC/DC Comp. Charger - EURO Plug	1
27200UK	1216-C2 Dual AC/DC Comp. Charger - UK Plug	1
27201	324-S AC LiPo/LiFe Compact Balance Charger	1
27201C3	324-S Charger w/4500mAh 11.1V LiPo Battery	1
	Charger Accessories	
998	5.0mm 4S Balance Charge Lead (4mm)	1
27220	7-in-1 Universal Charge Lead (4mm)	1
27221	T-plug Charge Lead (4mm)	1
27222	XH 2-6S Balance Board (4mm)	1
27223	RX Charger Lead FUT (4mm)	1
27224	US to IEC 320 C5 angle 1M AC Power Cord	1
27225	US to IEC 320 C5 angle .5M AC Power Cord	1
27226	EU to IEC 320 C5 angle 1M AC Power Cord	1
27227	UK to IEC 320 C5 angle 1M AC Power Cord	1
27228	AU to IEC 320 C5 angle 1M AC Power Cord	1
27229	CN to IEC 320 C5 angle 1M AC Power Cord	1

:: Reedy Motors

905	1515-SL4 2000kV 4-pole Sensorless Brushless Motor	1
978	Flat Sensor Wire 70mm	1
979	Flat Sensor Wire 110mm	1
980	Flat Sensor Wire 150mm	1
981	Flat Sensor Wire 200mm	1
982	Flat Sensor Wire 270mm	1
994	Flat Sensor Wire 125mm	1
995	Flat Sensor Wire 175mm	1
27405	Sonic 866 Competition 1/8 Buggy Motor 1900kV	1
27406	Sonic 866 Competition 1/8 Buggy Motor 2100kV	1
27407	Sonic 877 Competition 1/8 Truggy Motor 2000kV	1
27408	Sonic 866 Rotor - Standard	1
27409	Sonic 866 Rotor - Low-Torque	1
27410	Sonic 877 Rotor- Standard	1
27411	Sonic 866/877 Screw Set (11 pcs.)	1
27412	Sonic 866/877 Bearing Set (pr.)	1
27413	Sonic 866/877 Sensor Board w/Bearing	1

:: Reedy Electronics

	ESC'S	
27007	Blackbox 850R Comp. 1/8 ESC	1
27008	Blackbox 850R Comp. 1/8 ESC w/Programmer	1
27027	Blackbox PROgrammer2	1
27030	Blackbox ESC/Programmer2 Connection Wire	1
27032	Blackbox 850R 30x30x10mm Fan w/screw	1
29181	SC1000-BL Brushless ESC	1
29183	SC1000-BL/DB Fan	1
29184	SC800-BL/SC1000-BL/SC1000-DB/SC600-BL Switch	
	Servos	1
27100	RS1206 Digital HV Hi-Speed Competition Servo	1
27101	RT1508 Digital HV Hi-Torque Competition Servo	1
27102	RS1206 Servo Case Set w/screws	1
27103	RS1206 Servo Gear Set	1
27104	RT1508 Servo Case Set w/screws	1
27105	RT1508 Servo Gear Set	1
27106	RS1806A Digital HV Hi-Speed Alum. Comp. Servo	1
27107	RT2207A Digital HV Hi-Speed Alum. Comp. Servo	1
27111	1514MG Digital RTR Servo	1
27120	RS1806A Servo Gear Set	1
27121	RT2207A Servo Gear Set	1
27130	1514MG Servo Gear Set	
	Accessories	1
643	Low Profile Bullet Plug 4mm x 14mm (2)	1
644	Low Profile Bullet Plug 4mm x 14mm (10)	1
645	Low Profile Bullet Plug 5mm x 14mm (2)	1
646	Low Profile Bullet Plug 5mm x 14mm (10)	1
647	Silicone Wire 12AWG-Black (1m)	1
648	Silicone Wire 14AWG-Black (1m)	1
650	Shrink Tubing - 15pcs 4.5mm x 20mm	1
790	Silicone Wire 13AWG-Black (1m)	1
791	Silicone Wire 13AWG-Black (30m)	1
792	Low Profile Caged Bullet Plug 4mm x 14mm (2)	1
793	Low Profile Caged Bullet Plug 4mm x 14mm (10)	1
794	Low Profile Caged Bullet Plug 5mm x 14mm (2)	1
795	Low Profile Caged Bullet Plug 5mm x 14mm (10)	

:: Fueling Supplies (RC8T3.1 Nitro)

1738	FT Glow Starter	2
1747	Nitro Fuel Bottle Pro, 500cc	1
1751	FT Compact Starter Box	1
7724	Fuel Line 15"	1
7725	Fuel Line 3'	1

:: MyLaps Transponders

MLP10R078	MyLaps Hybrid (2-wire) Transponder	1
MLP10R120	MyLaps RC4 (3-wire) Transponder	1
MLP40R222	MyLaps Transponder Holder	1

:: Lubes / Adhesives / Decals / Misc.

1105	FT Green Slime Shock Lube	1
1596	FT Locking Adhesive	1
1597	FT Tire Adhesive	1
6588	Black Grease - 4cc	1
6591	Diff Lube - 4cc	1
6636	Silicone Grease - 4cc	1
6727	Servo Tape	2
7710	FT Foam Prefilter Treatment, 1 oz.	1
9787	FT Chassis Protective Sheet	1
81324	RC8T3 Pro Line Body	1
81325	RC8T3/T3e Decal Sheet	1

1596

:: Apparel / Promotional

	TEE SHIRTS	
SP11*	2016 Worlds T-shirt, blue, (S, M, L, XL-5XL)	1
SP12*	2016 Worlds T-shirt, black, (S, M, L, XL-5XL)	1
SP113*	AE Worlds Car Retro T-Shirt, (S, M, L, XL-3XL)	1
SP114*	Circuit T-Shirt - Black (S, M, L, XL-3XL)	1
SP120*	AE 3/4 Sleeve Tee, Gray (S, M, L, XL-3XL)	1
SP121*	Kids AE Speed Tee, Black (S, M, L)	1
SP122*	Ladies AE Speed Tee, Black (S, M, L, XL	1
SP123*	Mens AE Speed Tee, Navy (S, M, L, XL-5XL)	1
SP124*	AE 2017 Worlds Tee, Black (S, M, L, XL-3XL)	1
SP140*	Reedy Heritage Tee, Black (S, M, L, XL-5XL)	1
	HOODIES/JACKETS	
SP13*	AE Lite Jacket - Black - (S, M, L, XL, 2XL)	1
SP71*	AE Winter Jacket - Black (S, M, L, XL, 2XL)	1
SP111*	Reedy W15 Sweatshirt - Black (S, M, L, XL-3XL)	1
SP141*	Reedy R Hoodie - Black (S, M, L, XL-3XL)	1
	HATS	
SP20	AE Patch Trucker Hat	1
SP38	Reedy Trucker Hat	1
SP406	2017 Reedy Power Hat, Black	1
SP407	2017 Team Associated Hat, Gray	1
SP408	AE Worlds Hat	1
SP421S	AE 2012 Hat, Black, Flat Bill, S/M	1
SP421L	AE 2012 Hat, Black, Flat Bill, L/XL	1
SP422S	AE 2012 Hat, Black, Curved Bill, S/M	1
SP422L	AE 2012 Hat, Black, Curved Bill, L/XL	1
SP423S	AE 2012 Hat, White, Flat Bill, S/M	1
SP423L	AE 2012 Hat, White, Flat Bill, L/XL	1
SP424S	AE 2012 Hat, White, Curved Bill, S/M	1
SP424L	AE 2012 Hat, White, Curved Bill, L/XL	1
	BANNERS/MATS CARRIERS	
SP29	Team Associated Countertop/Setup Mat	1
SP30	Team Associated Pit Mat	1
SP31	Reedy Countertop/Setup Mat	1
SP115	Reedy Circuit Cloth Banner	1
SP425	FT Fluid Carrier	1
SP426	Team Associated Countertop / Setup Mat	1
SP427	Reedy Countertop / Setup Mat	1
726	Reedy 2016 Sticker Sheet	1
110684	Team Associated Track Banner (Black)	1
110685	Team Associated Cloth Banner	1

** Use part number plus the desired size when ordering!*

:: Tools

1111	FT Turnbuckle Wrench	1
1112	FT 4mm Turnbuckle Wrench	1
1113	12mm Big Bore Shock Tool	1
1114	FT Dual Turnbuckle Wrench	1
1449	Off Road Ride Height Gauge	1
1452	FT TC Ride Height Gauge	1
1498	FT Universal Tire Balancer	1
1541	FT Hex Driver Set, (7 pcs)	1
1545	FT 5/64" Blue Hex Driver	1
1555	FT Clutch Gauge, 4 Shoe	1
1568	FT 5.5mm Short Nut Driver	1
1569	FT 7mm Nut Driver, T-Handle	1
1570	FT 5.5mm Short Nut Driver	1
1571	FT 1:8 Wheel Nut Wrench, 17mm Hex	1
1579	FT Ball Cup Wrench	1
1590	FT 3/32" Gold Ball Hex Driver	1
1592	FT Ball Hex Driver Set, (3 pcs)	1
1655	FT 8-Piece 1/4" Hex Drive Set	1
1656	FT 1/4" Hex Drive Handle, without tips	1
1657	FT 1/4" Hex Drive .050" Tip	1
1658	FT 1/4" Hex Drive 1/16" Tip	1
1659	FT 1/4" Hex Drive 5/64" - 2.0mm Tip	1
1660	FT 1/4" Hex Drive 3/32" Tip	1
1661	FT 1/4" Hex Drive 1.5mm Tip	1
1662	FT 1/4" Hex Drive 2.5mm Tip	1
1663	FT 1/4" Hex Drive 3/16" Nut Driver Tip	1
1664	FT 1/4" Hex Drive 1/4" Nut Driver Tip	1
1665	FT 1/4" Hex Drive 11/32" Nut Driver Tip	1
1666	FT 1/4" Hex Drive 5.5mm Nut Driver Tip	1
1667	FT 1/4" Hex Drive 7.0mm Nut Driver Tip	1
1668	FT 1/4" Hex Drive 8.0mm Nut Driver Tip	1
1669	FT 1/4" Hex Drive 5/64" - 2.0mm Ball End Tip	1
1670	FT 1/4" Hex Drive 3/32" Ball End Tip	1
1671	FT 1/4" Hex Drive Standard Screwdriver Tip	1
1672	FT 1/4" Hex Drive Phillips Screwdriver Tip	1
1673	FT 1/4" Hex Drive 2.5mm Ball End Tip	1
1674	FT 1/4" 5 Piece Power Tool Tips Set (5/64-2.0mm, 1.5mm, 2.5mm, 5/64"- 2.0mm ball, 2.5mm ball)	1
1675	FT Shock Shaft Pliers	1
1679	FT T-Handle Ratchet Driver	1
1719	FT Camber + Track Width Tool	1
1737	FT Body Scissors	1
3718	12 Inch Nylon Wire Ties	12
3719	6 Inch Nylon Wire Ties	12
3720	8 Inch Nylon Wire Ties	12
3987	FT Droop Gauge	1
7709	4 Inch Nylon Wire Ties	12

RC8 T3.1e TEAM KIT

Driver: Kit Setup **Date:**
Track: **Event:**
Qualify: **TQ:** ☐ **Main:** **Finish:** **Best Lap Time:**

Front Suspension:

Ride Height: 37mm
Camber:
Toe: +2 deg Tierod + 62mm
Anti-Roll Bar
Size: 2.3 Black
Gap: 1mm

Ackerman
Notes:

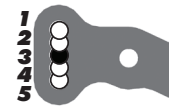

Drive Shaft: CVAs: ■ Universals: ☐
Chassis Brace: Short: ☐ Long: ■
Hex: Kit
Notes: +2 Steering Arm Plate

Upper Ball Type: Steel

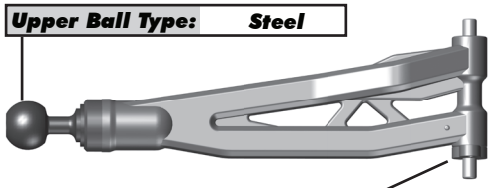

Caster Shim: 0

Wheelbase Shim: Behind Arm

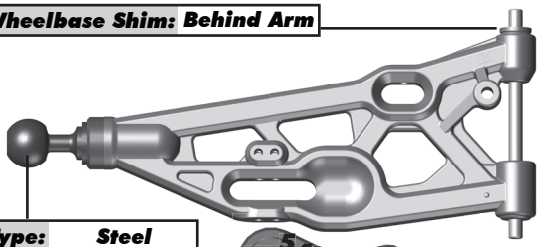

Lower Ball Type: Steel

Upper Ball Shim: 1.05mm

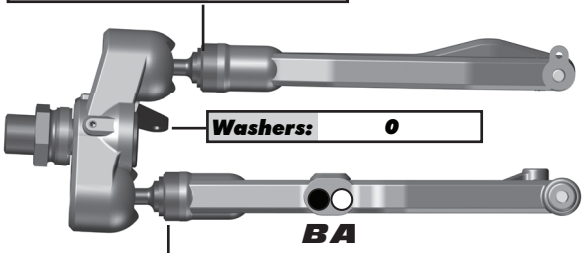

Washers: 0

Lower Ball Shim: 0.14mm

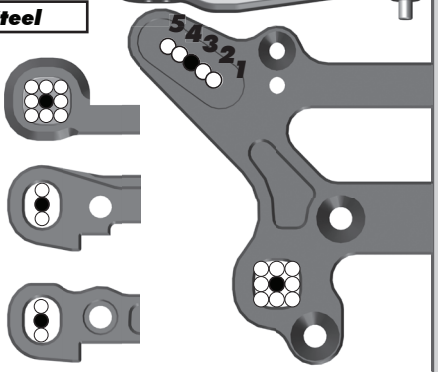

Rear Suspension:

Ride Height: 41mm
Camber: -2
Anti-Roll Bar
Size: 2.7 Blue
Gap: 1mm

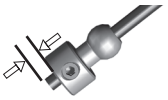

Drive Shaft: CVAs: ■ Universals: ☐
Chassis Brace: Short: ☐ Long: ■
Hex: Kit
Notes:

Hub Shim: Middle

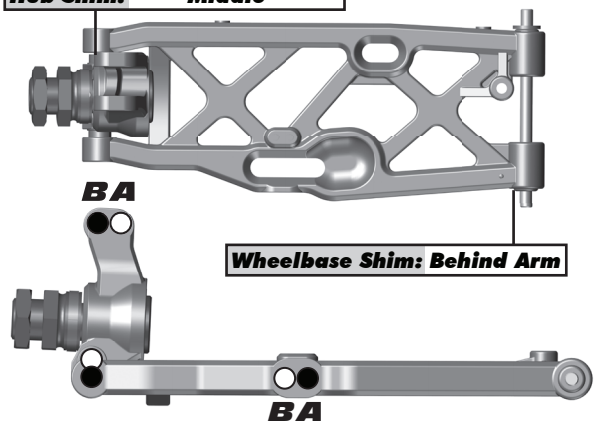

Wheelbase Shim: Behind Arm

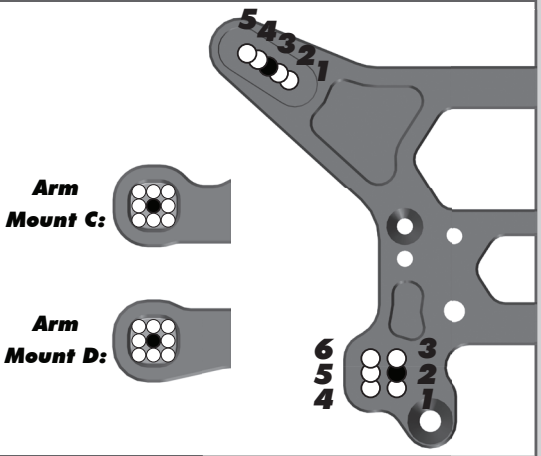

Electronics:

Radio:
Servo:
EPA: Throttle: % Brake: %
EXPO: Throttle: % Brake: %
ESC:
Motor:
Battery:
Notes:

Differential:

	Fluid	Gear Set	Planet O-Rings
Front:	10k	HTC	0
Center:	10k	HTC	0
Rear:	5k	HTC	0

Gearing:

Spur Gear: 46T **Pinion:** 13T
Notes:

Shocks:

	Front	Rear
Piston:	6x1.3 Flat	6x1.3 Flat
Fluid:	40wt	35wt
Cap:	Bleeder	Bleeder
Rebound:	0	0
Spring:	Blue	Blue
Free Length:	108	128

Notes:

Track Info:

Size: Small ☐ Medium ☐ Large ☐ Extra Large ☐
Surface: Dirt ☐ Carpet ☐ Astroturf ☐ Multi Surface ☐
Traction: Low ☐ Medium ☐ High ☐ Very High ☐
Moisture: Dry ☐ Damp ☐ Wet ☐
Condition: Indoor ☐ Outdoor ☐ Dusty ☐ Hard Packed ☐
Bumpy ☐ Grooved ☐ Smooth ☐ Loamy ☐
Temperature: Ambient: Track:
Notes:

Tires:

Front Tires:
Front Compound:
Front Insert:
Rear Tires:
Rear Compound:
Rear Insert:
Wheel (F/R):
Notes:

Body, Wing:

Body: Kit (Proline)
Wing: Kit
Wing Height: High: ☐ Low: ■
Gap to Tower: 0

Weight:

Total Vehicle Weight:
Notes:

Vehicle Comments:

Notes:

RC8 T3.1e TEAM KIT

Driver: _____ **Date:** _____
Track: _____ **Event:** _____
Qualify: _____ **TQ:** ☐ **Main:** _____ **Finish:** _____ **Best Lap Time:** _____

Front Suspension:

Ride Height:
Camber:
Toe:
Anti-Roll Bar
Size:
Gap:

Ackerman
Notes: _____

Drive Shaft: CVAs: ☐ Universals: ☐
Chassis Brace: Short: ☐ Long: ☐
Hex:
Notes: _____

Upper Ball Type:
Caster Shim:
Upper Ball Shim:
Washers:
Lower Ball Shim:

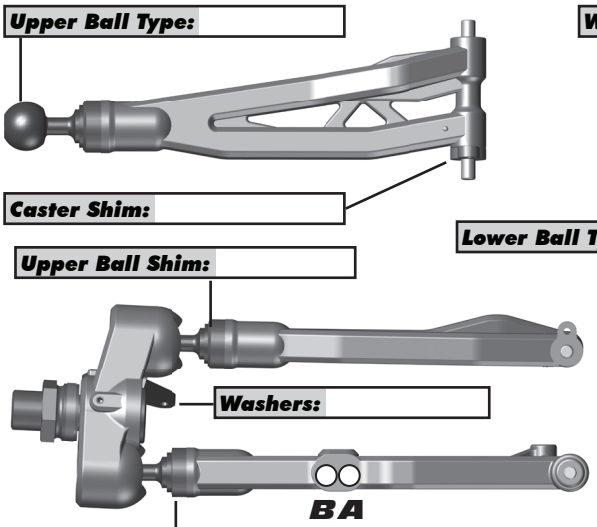

Wheelbase Shim:
Lower Ball Type:

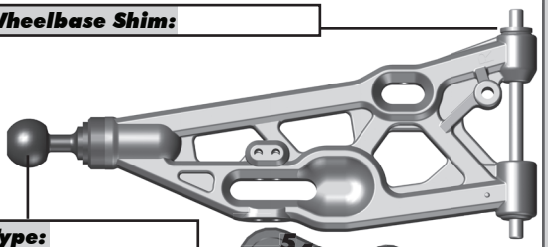

Upper Arm Mount:
Arm Mount A:
Arm Mount B:

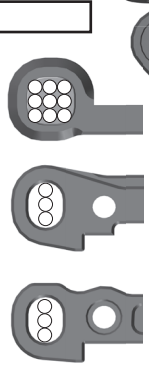

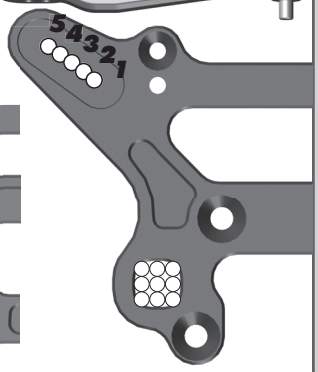

Rear Suspension:

Ride Height:
Camber:
Anti-Roll Bar
Size:
Gap:

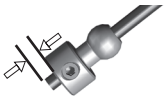

Drive Shaft: CVAs: ☐ Universals: ☐
Chassis Brace: Short: ☐ Long: ☐
Hex:
Notes: _____

Hub Shim:

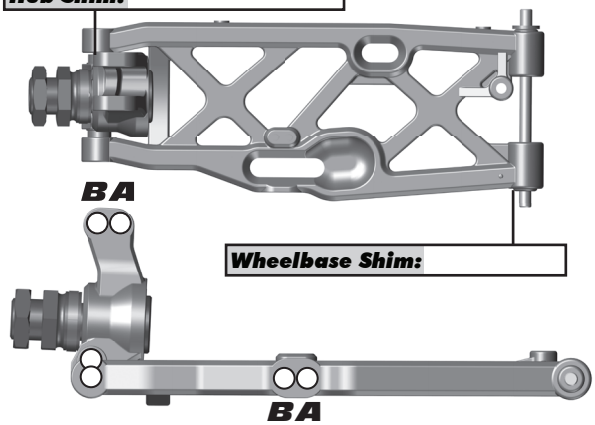

Wheelbase Shim:

Arm Mount C:
Arm Mount D:

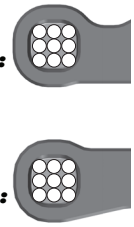

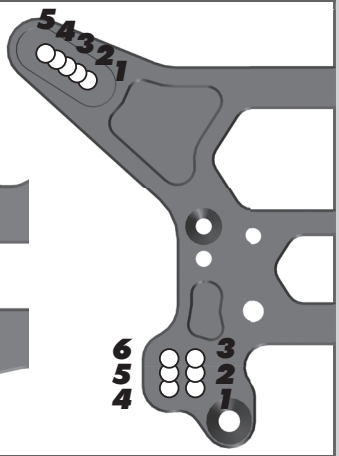

Electronics:

Radio:
Servo:
EPA: Throttle: % Brake: %
EXPO: Throttle: % Brake: %
ESC:
Motor:
Battery:
Notes: _____

Differential:

	Fluid	Gear Set	Planet O-Rings
Front:			
Center:			
Rear:			

Gearing:

Spur Gear: **Pinion:**
Notes: _____

Shocks:

	Front	Rear
Piston:		
Fluid:		
Cap:		
Rebound:		
Spring:		
Free Length:		

Notes: _____

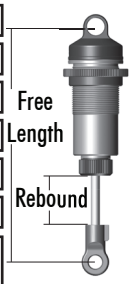

Track Info:

Size:	Small ☐	Medium ☐	Large ☐	Extra Large ☐
Surface:	Dirt ☐	Carpet ☐	Astroturf ☐	Multi Surface ☐
Traction:	Low ☐	Medium ☐	High ☐	Very High ☐
Moisture:	Dry ☐	Damp ☐	Wet ☐	
Condition:	Indoor ☐	Outdoor ☐	Dusty ☐	Hard Packed ☐
	Bumpy ☐	Grooved ☐	Smooth ☐	Loamy ☐

Temperature: Ambient: Track:
Notes:

Tires:

Front Tires:
Front Compound:
Front Insert:
Rear Tires:
Rear Compound:
Rear Insert:
Wheel (F/R):
Notes:

Body, Wing:

Body:
Wing:
Wing Height: High: ☐ Low: ☐
Gap to Tower:

Weight:

Total Vehicle Weight:
Notes: _____

Vehicle Comments:

Notes:

RC8 T3.1 TEAM KIT

Driver: Kit Setup **Date:**
Track: **Event:**
Qualify: **TQ:** ☐ **Main:** **Finish:** **Best Lap Time:**

Front Suspension:

Ride Height: 37mm
Camber:
Toe: +2 deg Tierod+ 62mm
Anti-Roll Bar
Size: 2.3 Black
Gap: 1mm

Ackerman
Notes:

Drive Shaft: CVAs: ■ Universals: ☐
Chassis Brace: Short: ☐ Long: ■
Hex: Kit
Notes: +2 Steering Arm Plate

Upper Ball Type: Steel

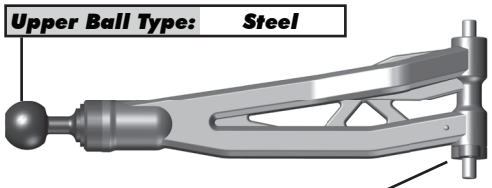

Caster Shim: 0

Wheelbase Shim: Behind Arm

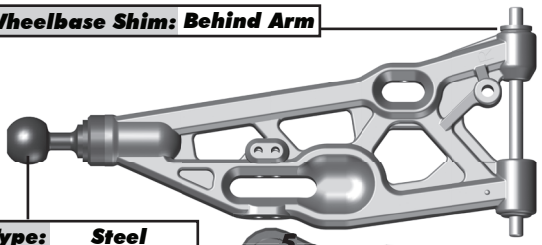

Lower Ball Type: Steel

Upper Ball Shim: 1.05mm

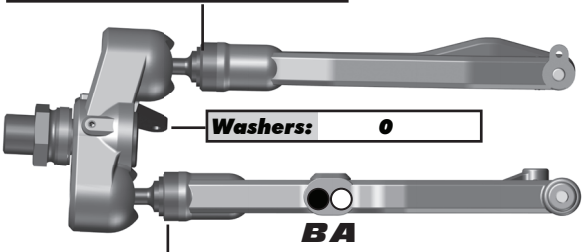

Washers: 0

Lower Ball Shim: 0.14mm

Upper Arm Mount:

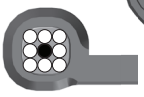

Arm Mount A:

Arm Mount B:

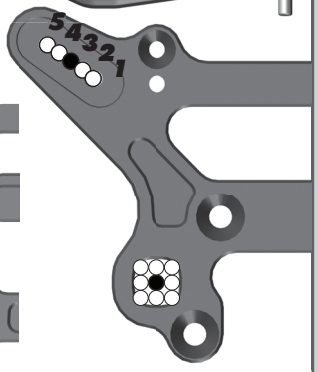

Rear Suspension:

Ride Height: 41mm
Camber: -2
Anti-Roll Bar
Size: 2.7 Blue
Gap: 1mm

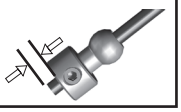

Drive Shaft: CVAs: ■ Universals: ☐
Chassis Brace: Short: ☐ Long: ■
Hex: Kit
Notes:

Hub Shim: Middle

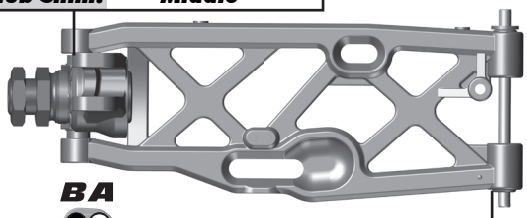

Wheelbase Shim: Behind Arm

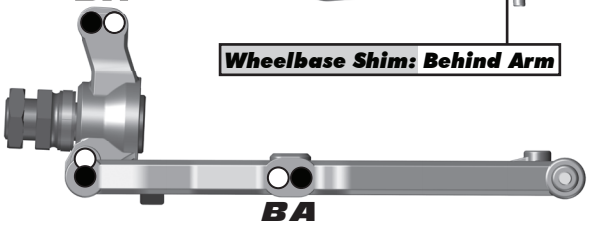

Arm Mount C:

Arm Mount D:

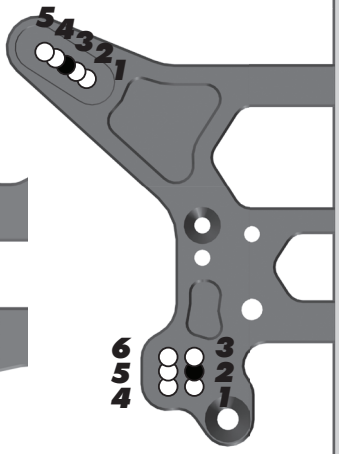

Electronics and Engine:

Radio:
Receiver Battery:
Throttle Servo:
Steering Servo:
EPA: Throttle: % Brake: %
Brake Bias: **D/R:** %
Engine: **Temp:**
Muffler: **Fuel:**
Restrictor: **Glow Plug:**

Differential:

	Fluid	Gear Set	Planet O-Rings
Front:	10k	HTC	0
Center:	10k	HTC	0
Rear:	5k	HTC	0

Clutch and Gearing:

Spur Gear: **Bell:**
Shoes: 2 aluminum, 2 composite
Springs: green-alum., black comp.

Shocks:

	Front	Rear
Piston:	6x1.3 Flat	6x1.3 Flat
Fluid:	40wt	35wt
Cap:	Bleeder	Bleeder
Rebound:	0	0
Spring:	Blue	Blue
Free Length:	108	128

Notes:

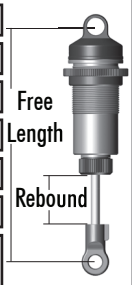

Track Info:

Size: Small ☐ Medium ☐ Large ☐ Extra Large ☐
Surface: Dirt ☐ Carpet ☐ Astroturf ☐ Multi Surface ☐
Traction: Low ☐ Medium ☐ High ☐ Very High ☐
Moisture: Dry ☐ Damp ☐ Wet ☐
Condition: Indoor ☐ Outdoor ☐ Dusty ☐ Hard Packed ☐
Bumpy ☐ Grooved ☐ Smooth ☐ Loamy ☐
Temperature: Ambient: Track:
Notes:

Tires:

Front Tires:
Front Compound:
Front Insert:
Rear Tires:
Rear Compound:
Rear Insert:
Wheel (F/R):
Notes:

Body, Wing:

Body: Kit (Proline)
Wing: Kit
Wing Height: High: ☐ Low: ■
Gap to Tower: 0

Weight:

Total Vehicle Weight:
Notes:

Vehicle Comments:

Notes:

RC8 T3.1 TEAM KIT

Driver: _____ **Date:** _____
Track: _____ **Event:** _____
Qualify: _____ **TQ:** ☐ **Main:** _____ **Finish:** _____ **Best Lap Time:** _____

Front Suspension:

Ride Height:
Camber:
Toe:
Anti-Roll Bar
Size:
Gap:

Ackerman
Notes: _____

Drive Shaft: CVAs: ☐ Universals: ☐
Chassis Brace: Short: ☐ Long: ☐
Hex:
Notes: _____

Upper Ball Type:

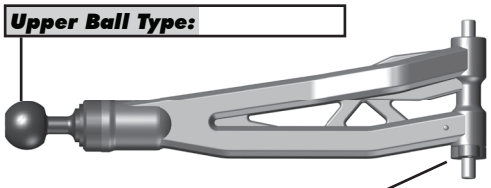

Caster Shim:

Wheelbase Shim:

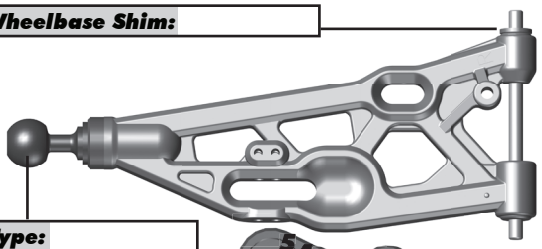

Lower Ball Type:

Upper Ball Shim:

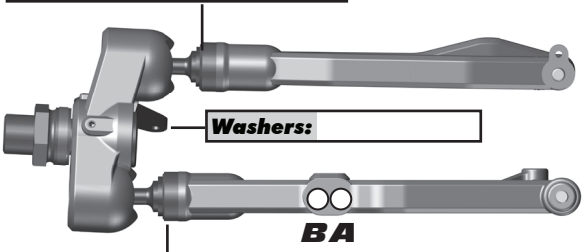

Washers:

Lower Ball Shim:

Upper Arm Mount:

Arm Mount A:

Arm Mount B:

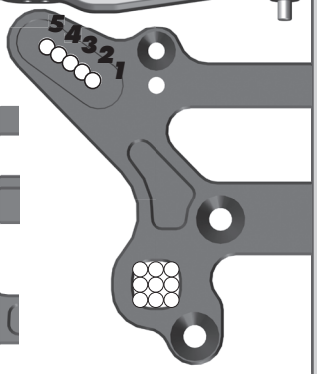

Rear Suspension:

Ride Height:
Camber:
Anti-Roll Bar
Size:
Gap:

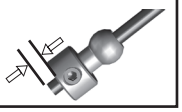

Drive Shaft: CVAs: ☐ Universals: ☐
Chassis Brace: Short: ☐ Long: ☐
Hex:
Notes: _____

Hub Shim:

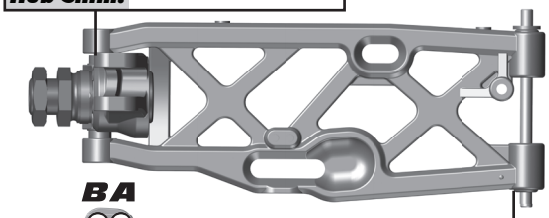

Wheelbase Shim:

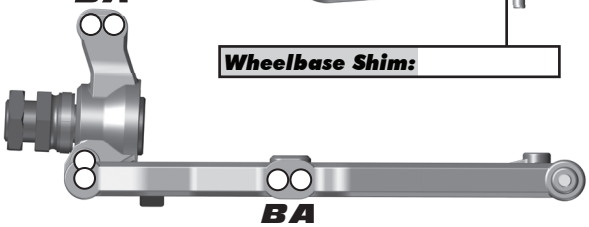

Arm Mount C:

Arm Mount D:

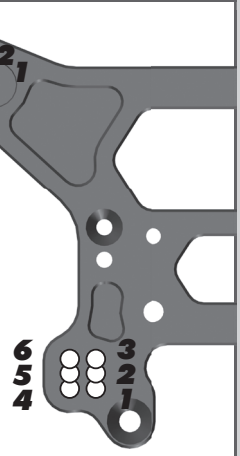

Electronics and Engine:

Radio:
Receiver Battery:
Throttle Servo:
Steering Servo:
EPA: Throttle: % Brake: %
Brake Bias: **D/R:** %
Engine: **Temp:**
Muffler: **Fuel:**
Restrictor: **Glow Plug:**

Differential:

	Fluid	Gear Set	Planet O-Rings
Front:			
Center:			
Rear:			

Clutch and Gearing:

Spur Gear: **Bell:**
Shoes:
Springs:

Shocks:

	Front	Rear
Piston:		
Fluid:		
Cap:		
Rebound:		
Spring:		
Free Length:		

Notes: _____

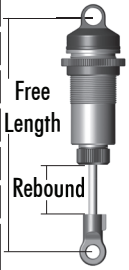

Track Info:

Size: Small ☐ Medium ☐ Large ☐ Extra Large ☐
Surface: Dirt ☐ Carpet ☐ Astroturf ☐ Multi Surface ☐
Traction: Low ☐ Medium ☐ High ☐ Very High ☐
Moisture: Dry ☐ Damp ☐ Wet ☐
Condition: Indoor ☐ Outdoor ☐ Dusty ☐ Hard Packed ☐
Bumpy ☐ Grooved ☐ Smooth ☐ Loamy ☐
Temperature: Ambient: Track:
Notes:

Tires:

Front Tires:
Front Compound:
Front Insert:
Rear Tires:
Rear Compound:
Rear Insert:
Wheel (F/R):
Notes:

Body, Wing:

Body:
Wing:
Wing Height: High: ☐ Low: ☐
Gap to Tower:

Weight:

Total Vehicle Weight:
Notes: _____

Vehicle Comments:

Notes:

Associated Electrics, Inc.
26021 Commercentre Dr.
Lake Forest, CA 92630 USA
http://www.RC10.com
https://twitter.com/Team_Associated
https://www.instagram.com/teamassociatedrc/
https://www.facebook.com/TeamAssociated/

call: (949) 544-7500 - fax: (949) 544-7501
Check out the following web sites for all of our kits,
current products, new releases, setup help, tips, and racing info!
www.TeamAssociated.com. - www.RC10.com