RC10 T6.2 TEAM KIT

Driver:	Dustin Evans	**Event:**	Masters of Dirt
Date:	October 25, 2020	**Track:**	BeachRC
Qualify:	2nd	**TQ:** ☐ **Main:** A	**Finish:** 1st **Best Lap Time:** 17.708

Reset Forms

Front Suspension:

Ride Height:	25 mm (Body Off)
Camber:	-1*
Toe:	0* (Tierod Gap = 41.4 mm)
Anti-Roll Bar:	1.4 mm
Arm Type:	#71138 Gullwing, Standard
Tower Type:	#71136 Gullwing
Wheel Hex:	#71111 Front Axle, 8.5 mm
Steering Block:	4 mm
Caster Block Insert:	0*
Bulkhead Type:	#91658 FT Aluminum
Kick-Up Angle:	25*
Notes:	#91668 FT Aluminum Steering Bellcranks #1369 FT Clamping Servo Horn, 15.5 mm

Bump Steer Spacing: 0 mm

Ball Stud Spacing: 1 mm

Axle Height:
- +3 ☐
- +2 ☐
- +1 ■
- 0 ☐

Steering Plate: Schelle Type 1

Steering Stop Spacing: 1.5 mm

Ball Stud Spacing: 1 mm

Caster Block Spacing: 1 mm

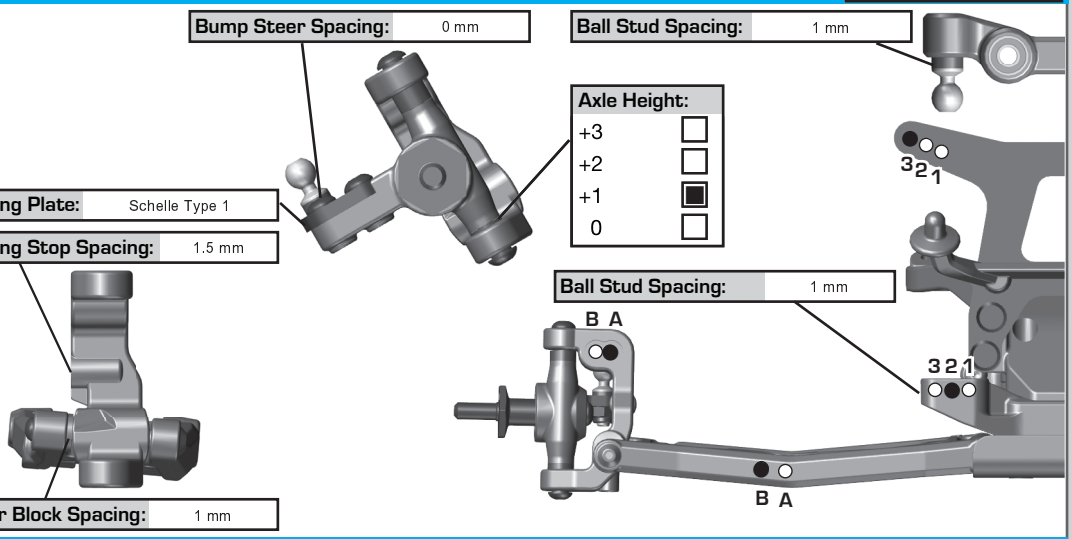

Rear Suspension:

Ride Height:	25 mm (Body Off)
Camber:	-1*
Anti-Roll Bar:	N/A
Arm Type:	#71140 Gullwing, Standard
Tower Type:	#71137 T6.2 Standard
Arm Spacing:	Rear (2 mm In Front Of Arm)
Wheel Hex:	#71014 FT Clamping Wheel Hex, 8.5 mm
Shock Mounting Position:	Front of Arm ■ Rear of Arm ☐
Hub Spacing:	Fwd ☐ Mid ■ Back ☐
Notes:	

C Mount: Aluminum ■ Brass ☐

D Mount: Aluminum ■ Brass ☐

Axle Height:

▼0	3▲	+3
▼1	2▲	+2
▲1	2▼	+1
▲0	3▼	+0

Camber Link Spacing: 2 mm

Ball Stud Spacing: 2 mm

Ball Stud Spacing: 3 mm

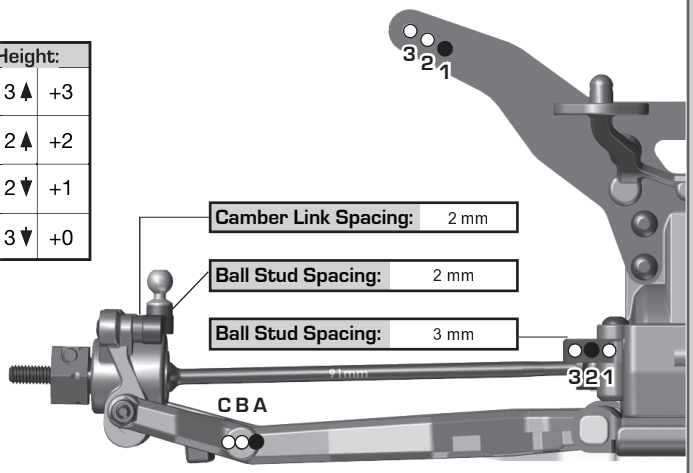

Electronics:

Radio:	Futaba 7PXR	Servo:	#27101 Reedy RT1508
EPA:	Throttle: 100 %	Brake:	90 %
ESC:	#27004 Reedy Blackbox 510R		
ESC Settings:	See Setup Sheet		
Motor:	Reedy M4 (#27447 M4 Rotor 12.5 x 7.25 mm)		
Wind:	#27444 6.5T	Timing:	20*
Pinion:	#1336 FT 18T	Spur:	#92296 81T Octalock
Battery:	#27352 Reedy Zapper 6100 mAh 85C		
Battery Position:	5F		
Battery Weight:	#27304 Reedy LiPo Battery Weight Set - 36g		

Drivetrain:

Transmission:		Laydown:	■
Stand Up:	☐	Layback:	☐
Differential:		Ball Diff:	■
Height:	+3	Gear Diff:	☐
Gear Diff Mass:			
Notes:	#6576 FT Precision Ground Diff Drive Rings		

Slipper Clutch:

Type:	#91802 & 91806 FT Vented Slipper Hubs
# of Pads:	2 x #92286 FT Octalock LCF
Setting:	Front Tires Just Pull Off The Ground

Shocks:

	Front	Rear
Piston:	#91626 2 x 1.6 mm	#91627 2 x 1.7 mm
Fluid:	#5429 FT 35 wt	#5422 FT 30 wt
Spring:	#91638 Blue	#91640 White
Limiters:	Int: 0 Ext: 0	Int: 0 Ext: 0
Stroke:	29.0 mm	34.5 mm
Eyelet Length:	Long	Long
Cup Offset:	5 mm	5 mm
Notes:	#91494 Machined Shock Spacers; #91493 FT X-Rings; #91620 & 91624 FT Chrome Shock Shafts; #91577 & 91570 FT Fox Shock Bodies	

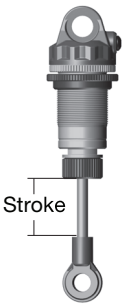

Track Info:

Size:	Small ☐	Medium ■	Large ☐	Extra Large ☐
Surface:	Dirt ■	Carpet ☐	Astroturf ☐	Multi Surface ☐
Traction:	Low ☐	Medium ☐	High ☐	Very High ■
Moisture:	Dry ■	Damp ☐	Wet ☐	
Condition:	Indoor ■	Outdoor ☐	Dusty ■	Hard Packed ■
	Bumpy ■	Grooved ■	Smooth ☐	Loamy ☐
Temperature:	Ambient: 65*F	Track: 65*F		
Notes:				

Tires:

Front Tires:	Pro-Line Positrons (Slicks)
Front Compound:	S3
Front Insert:	Pro-Line Closed Cell
Rear Tires:	Pro-Line Positron (Slicks)
Rear Compound:	S3
Rear Insert:	Pro-Line Closed Cell
Wheel (F/R):	#7852 Team Associated 12mm Hex
Notes:	Liquid Wrench Penetrating Oil - Sit 10 Min

Body, Weight:

Body:	#71126 T6.2 Kit
Spoiler:	#71126 T6.2 Kit
Servo Weights:	#91745 FT Aluminum
Electronic Weights:	#91754 FT Carbon Fiber
Total Vehicle Weight:	N/A
Notes:	

Vehicle Comments: #71142 Side Rails, Standard

:: For more setups, visit RC10.com and click on "Setup Sheets"