RC10 SC6.2 TEAM KIT

Driver: SC6.2 Kit Setup | Event: | Date: | Track: | Qualify: | TQ: ☐ | Main: | Finish: | Best Lap Time:

Front Suspension:

Ride Height:	27
Camber:	-1
Toe:	0
Anti-Roll Bar:	1.3mm
Arm Type:	Kit #71103
Tower Type:	Kit #71115
Wheel Hex:	8.5mm
Steering Block:	4mm
Caster Block Insert:	+5
Bulkhead Type:	Plastic
Kick-Up Angle:	25
Notes:	

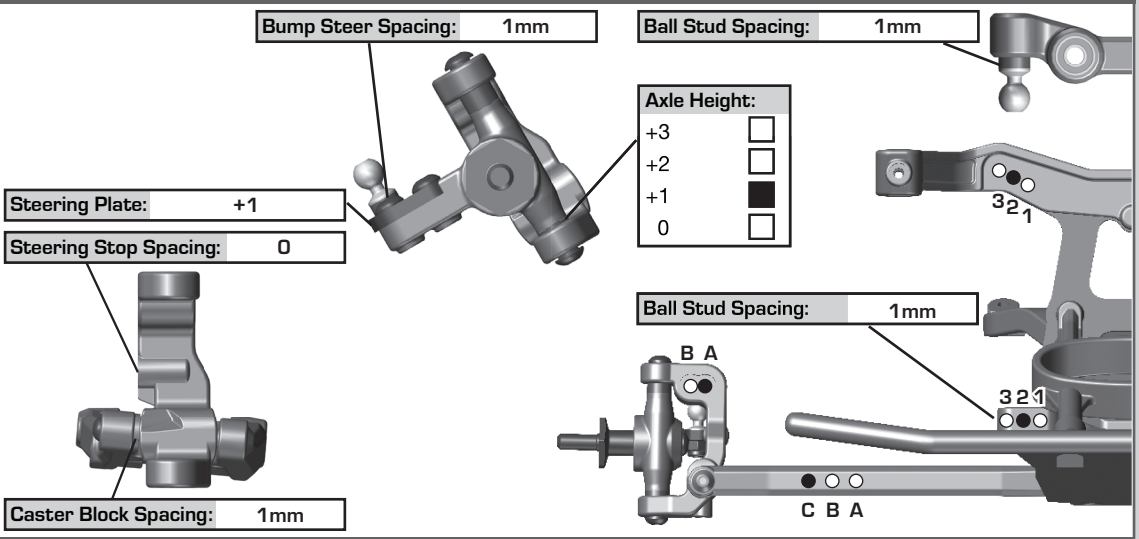

Rear Suspension:

Ride Height:	26
Camber:	-1
Anti-Roll Bar:	
Arm Type:	Kit #71105
Tower Type:	Kit #71148
Wheel Hex:	8.5mm
Shock Mounting Position:	Front of Arm ☐ Rear of Arm ■
Hub Spacing:	Fwd ☐ Mid ■ Back ☐
Notes:	

C Mount: Aluminum ■ Brass ☐

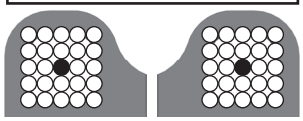

D Mount: Aluminum ■ Brass ☐

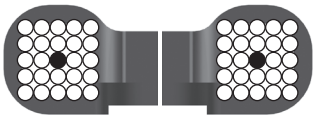

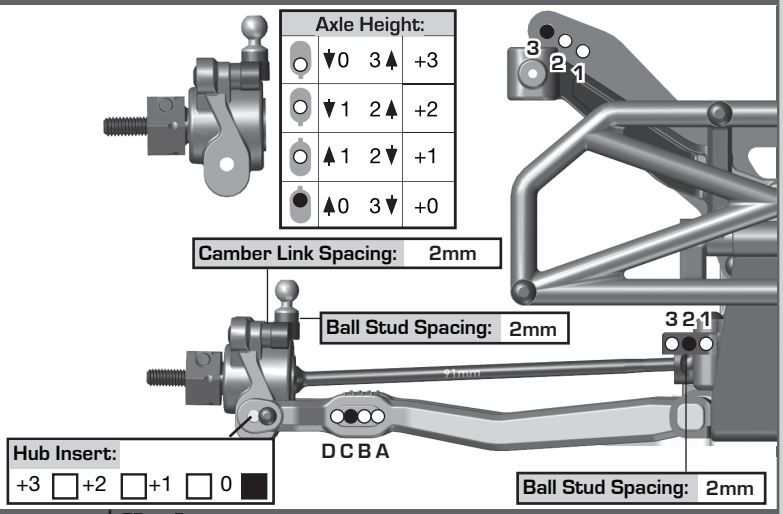

Electronics:

Radio:	
Servo:	
EPA:	Throttle: % Brake: %
ESC:	
ESC Settings:	
Motor:	
Wind:	
Timing:	
Pinion:	
Spur:	81
Battery:	
Batt. Position:	BACK 1 ☐ 2 ■ 3 ☐ 4 ☐ 5 ☐ FWD

Drivetrain:

Transmission:	Laydown: ☐ Layback: ■ Stand Up: ☐
Differential:	Ball Diff: ■
Height: 0	Gear Diff: ☐
Notes:	

Slipper Clutch:

Setting:	Kit
Pad Type:	2 Pads ■ 3 Pads ☐

Shocks:

	Front	Rear
Piston:	2 x 1.6	2 x 1.7
Fluid:	30wt	30wt
Spring:	Gray 54mm	White 72mm
Limiters:	2 Internal	1 Internal
Stroke:	26.5mm	35mm
Eyelet Length:	Long	Long
Cup Offset:	5mm	5mm
Notes:		

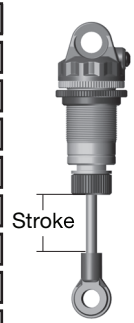

Track Info:

Size:	Small ☐	Medium ☐	Large ☐	Extra Large ☐
Surface:	Dirt ☐	Carpet ☐	Astroturf ☐	Multi Surface ☐
Traction:	Low ☐	Medium ☐	High ☐	Very High ☐
Moisture:	Dry ☐	Damp ☐	Wet ☐	
Condition:	Indoor ☐	Outdoor ☐	Dusty ☐	Hard Packed ☐
	Bumpy ☐	Grooved ☐	Smooth ☐	Loamy ☐
Temperature:	Ambient:	Track:		
Notes:				

Tires:

Front Tires:	
Front Compound:	
Front Insert:	
Rear Tires:	
Rear Compound:	
Rear Insert:	
Wheel (F/R):	
Notes:	

Body, Weight:

Body:	
Body Height:	
Servo Weights:	None ■ Aluminum ☐ Steel ☐ Other ☐
Electronic Weights:	None ☐ Aluminum ■ Steel ☐ Other ☐
Total Vehicle Weight:	

Vehicle Comments:

Notes: