RC10 B6.2 TEAM KIT

Driver: Brent Thielke **Event:** Florida Carpet Championship
Date: November 22, 2020 **Track:** Beachline Raceway
Qualify: 2nd 40+ **TQ:** ☐ **Main:** A **Finish:** 1st 40+ **Best Lap Time:** N/A

Reset Forms

Front Suspension:

Ride Height:	15 mm
Camber:	-1
Toe:	0*
Anti-Roll Bar:	1.0 mm
Arm Type:	#91674 Gullwing, Hard
Tower Type:	#91768 Gullwing
Caster Block Insert:	2.5*
Steering Block:	3 mm
Bulkhead Type:	#91658 FT Aluminum
Kick-Up Angle:	25*
Wheel Hex:	Titanium
Notes:	#1366 FT Aluminum Servo Horn, 25T
	#91669 FT Aluminum Steering Rack; Steering Bellcranks Raised 1mm

Bump Steer Spacing: 0 mm
Steering Plate: Schelle Type 1
Steering Stop Spacing: 0 mm
Axle Height: +2 mm
Caster Block Spacing: 1 mm
Ball Stud Spacing: 0 mm
Ball Stud Spacing: 1 mm

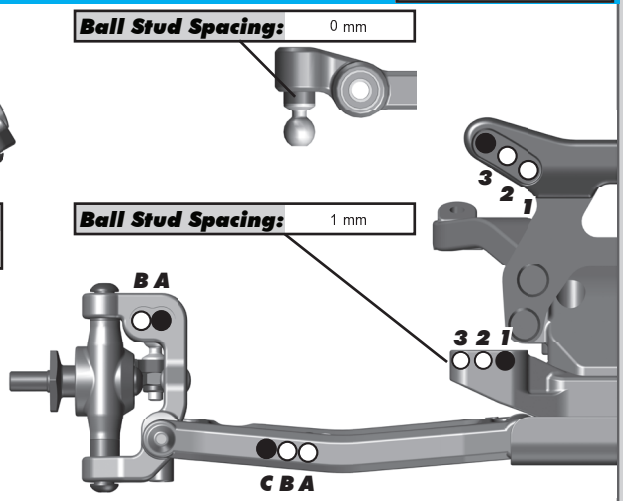

Rear Suspension:

Ride Height:	15 mm
Camber:	-1*
Anti-Roll Bar:	1.3 mm
Arm Type:	#91856 75 mm, Hard
Arm Spacing:	Back (2 mm In Front Of Arm)
Hub Spacing:	Forward ☐ Middle ■ Back ☐
Shock Mounting Position:	Front of Arm ■ Rear of Arm ☐
Tower Type:	#91769 Standard
Wheel Hex:	FT Clamping, 5.0 mm
CVA Bone Length:	#91860 69 mm
CVA Axle:	#91859 +2 mm
Notes:	

C Mount: Aluminum ■ Brass ☐
D Mount: Aluminum ■ Brass ☐

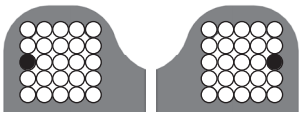

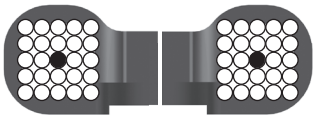

Possible Insert Locations

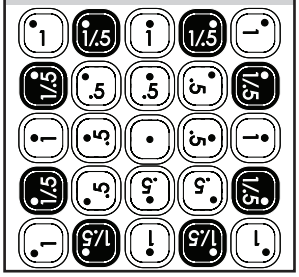

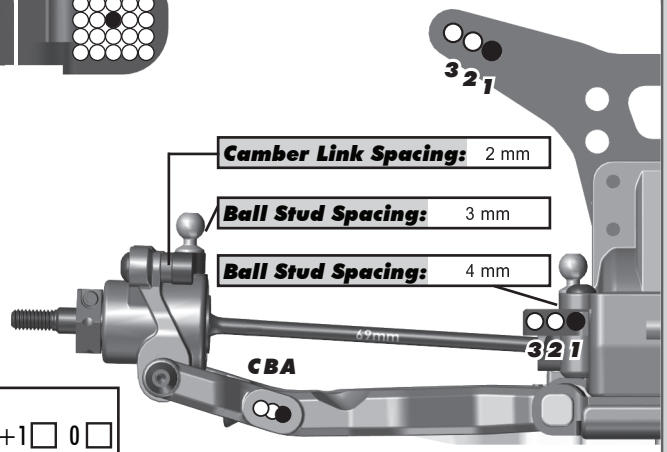

Hub Insert: +3 ☐ +2 ■ +1 ☐ 0 ☐

Electronics:

Radio:	Sanwa M12S
Servo:	#27109 Reedy RT1408
EPA:	Throttle: 100 % Brake: 80 %
ESC:	#27004 Reedy Blackbox 510R
ESC Settings:	See Setup Sheet
Motor:	Reedy Sonic M4 + #27449 Reedy 540-M4 Mod Rotor (13.0x5.0x25.3)
Wind:	#27442 7.0T
Timing:	25*
Pinion:	#1342FT 24T
Spur:	78
Battery:	#27349 Reedy Zapper SG3 4100 mAh
Battery Position:	5F
Battery Weight:	#27304 Reedy LiPo Battery Weight Set 22g + 36g

Drivetrain:

Transmission: Laydown: ■
3 Gear: ■ Layback: ☐
4 Gear: ☐ Stand Up: ☐

Differential: Ball Diff: ☐
Height: 2 Gear Diff: ■
Gear Diff Mass:

Notes: #5454 FT 7k w/ 2 Planet Gears

Slipper Clutch:

Type:	#91802 & 91806 FT Vented Slipper Hub
# of Pads:	2 x #92285 FT Octalock LCF, 11mm

Shocks:

	Front	Rear
Piston:	2 x 1.6 Flat	2 x 1.7 Flat
Fluid:	#5433 37.5 wt	#5429 35 wt
Spring:	V2 Yellow	V2 Gray
Int. Limiters:	0	0
Ext. Limiters:	0	0
Stroke:	22.0 mm	28.0 mm
Eyelet Length:	Long	Long
Cup Offset:	5 mm	0 mm
Notes:	#91494 Machined Shock Spacers V2; #91493 FT X-Rings	

Track Info:

Size:	Small ☐	Medium ■	Large ■	Extra Large ☐
Surface:	Dirt ☐	Carpet ■	Astroturf ☐	Multi Surface ☐
Traction:	Low ☐	Medium ☐	High ■	Very High ■
Moisture:	Dry ■	Damp ☐	Wet ☐	
Condition:	Indoor ■	Outdoor ☐	Dusty ☐	Hard Packed ☐
	Bumpy ☐	Grooved ☐	Smooth ☐	Loamy ☐

Temperature: Ambient: 70F Track: 70F
Notes:

Tires:

Front Tires:	JConcepts Swagger
Front Compound:	Double Pink
Front Insert:	None
Rear Tires:	JConcepts Twin Pin
Rear Compound:	Double Pink
Rear Insert:	JConcepts Open Cell (Cut To 3/4 Width)
Wheel (F/R):	#91757 & 9695 Team Associated 12mm Hex
Notes:	Best Performance = Runs 2 Through 4

Chassis, Body, Wing:

Body:	JConcepts S2
Front Wing:	#91866 B6.2
Rear Wing:	#91741 Team Associated B6.2 Kit
Wing Angle:	0° ☐ 3° ☐ 6° ■
Chassis Length:	#91850 B6.2 +3
Servo Weights:	#91747 FT Steel
Electronic Weights:	#91748 FT Steel
Total Vehicle Weight:	1548g

Vehicle Comments: #91727 FT Titanium Turnbuckle Set; #91616 & 91620 FT Chrome Shock Shafts;

:: For more setups, visit RC10.com and click on "Setup Sheets"