RC10 B6.2 TEAM KIT

Driver: Davey Batta **Event:** Pro-Line Surf City Classic
Date: September 6, 2020 **Track:** OCRC Raceway - Huntington Beach
Qualify: 1 **TQ:** ■ **Main:** A **Finish:** 1 **Best Lap Time:** N/A

Reset Forms

Front Suspension:

Ride Height:	21 mm
Camber:	-2
Toe:	0° (Tierod Gap = 27.50 mm)
Anti-Roll Bar:	None
Arm Type:	#91673 Gullwing, Standard
Tower Type:	#91768 Gullwing
Caster Block Insert:	5°
Steering Block:	4 mm
Bulkhead Type:	Plastic
Kick-Up Angle:	25°
Wheel Hex:	Titaninum
Notes:	#1366 FT Aluminum Servo Horn, 25T FT Aluminum Bellcranks

Bump Steer Spacing: 0 mm
Steering Plate: #91680 +1
Steering Stop Spacing: 0 mm
Axle Height: +2 mm
Caster Block Spacing: 1 mm
Ball Stud Spacing: 1 mm
Ball Stud Spacing: 1 mm

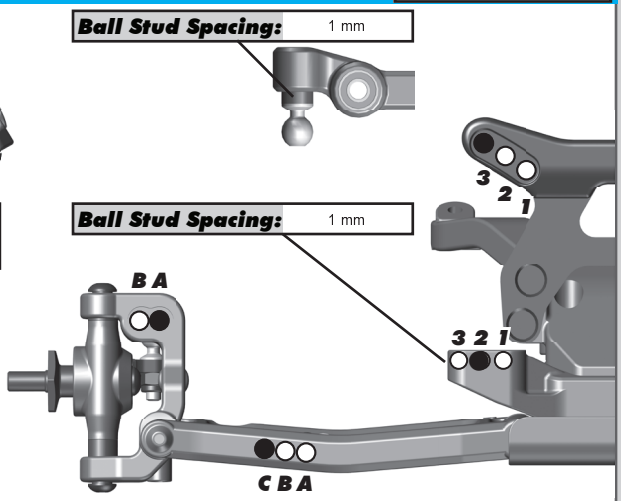

Rear Suspension:

Ride Height:	21 mm
Camber:	-2°
Anti-Roll Bar:	None
Arm Type:	73 mm, Standard
Arm Spacing:	Forward (2 mm Behind Arm)
Hub Spacing:	Forward ☐ Middle ■ Back ☐
Shock Mounting Position:	Front of Arm ■ Rear of Arm ☐
Tower Type:	#91769 Standard
Wheel Hex:	FT Clamping, 7.0 mm
CVA Bone Length:	#91846 FT MIP Bi-Metal 67 mm
CVA Axle:	#91859 +2 mm
Notes:	#91844 FT MIP Drivetrain Kit, 67mm

C Mount: Aluminum ■ Brass ☐

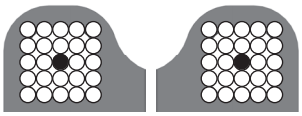

D Mount: Aluminum ■ Brass ☐

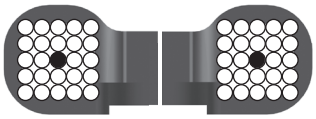

Possible Insert Locations

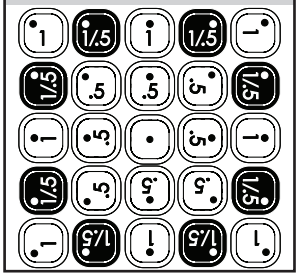

Hub Insert: +3 ☐ +2 ■ +1 ☐ 0 ☐

Camber Link Spacing: 2 mm
Ball Stud Spacing: 1 mm
Ball Stud Spacing: 4 mm

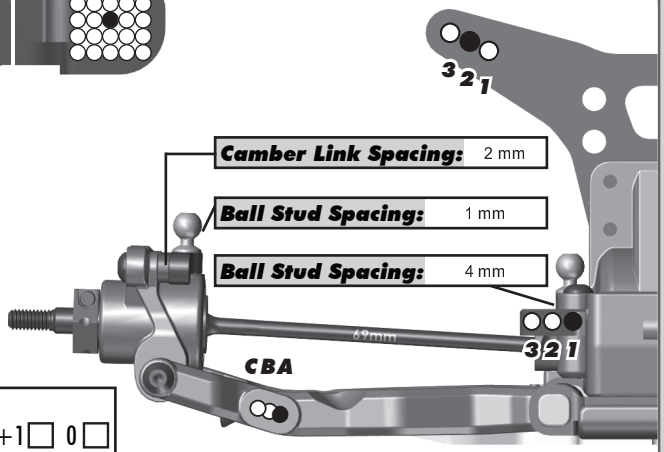

Electronics:

Radio:	Sanwa M17	Servo:	Reedy RT1206
EPA:	Throttle: 100 %		Brake: 100 %
ESC:	R1 Werks Digital 3		
ESC Settings:	See Setup Sheet		
Motor:	R1 Werks V21		
Wind:	17.5T	Timing:	50°
Pinion:	30T	Spur:	75T
Battery:	R1 6200 mAh		
Battery Position:	5F		
Battery Weight:	N/A		

Drivetrain:

Transmission: Laydown: ■
3 Gear: ■ Layback: ☐
4 Gear: ☐ Stand Up: ☐

Differential: Ball Diff: ■
Height: 2 Gear Diff: ☐
Gear Diff Mass:

Notes: #6576 FT Precision Ground Drive Rings

Slipper Clutch:

Type:	Team Associated Lockout
# of Pads:	

Shocks:

	Front	Rear
Piston:	1 x 1.6 + 1 x 1.7, Flat, Machined	2 x 1.7 Flat, Machined
Fluid:	32.5 wt	27.5 wt
Spring:	#91328 V1 White	#91336 V1 Green
Int. Limiters:	1	0
Ext. Limiters:	1	1
Stroke:	24.0 mm	29 mm
Eyelet Length:	Long	Long
Cup Offset:	5 mm	5 mm
Notes:	#91494 Machined Shock Spacers V2; #91493 FT X-Rings	

Track Info:

Size:	Small ☐	Medium ☐	Large ■	Extra Large ☐
Surface:	Dirt ■	Carpet ☐	Astroturf ☐	Multi Surface ☐
Traction:	Low ☐	Medium ☐	High ■	Very High ■
Moisture:	Dry ■	Damp ☐	Wet ☐	
Condition:	Indoor ■	Outdoor ☐	Dusty ☐	Hard Packed ■
	Bumpy ■	Grooved ■	Smooth ☐	Loamy ☐
Temperature:	Ambient: 85F	Track: 85F		
Notes:				

Tires:

Front Tires:	Pro-Line Positron
Front Compound:	S3
Front Insert:	Pro-Line Closed Cell
Rear Tires:	Pro-Line Positron
Rear Compound:	S3
Rear Insert:	Pro-Line Closed Cell
Wheel (F/R):	#9690 & 9695 Team Associated 12mm Hex
Notes:	Liquid Wrench Penetrating Oil

Chassis, Body, Wing:

Body:	Pro-Line Axis
Front Wing:	#91866 B6.2
Rear Wing:	#91741 Team Associated B6.2 Kit
Wing Angle:	0° ☐ 3° ☐ 6° ■
Chassis Length:	B6.2D Kit
Servo Weights:	N/A
Electronic Weights:	N/A
Total Vehicle Weight:	1503g

Vehicle Comments: #91652 Side Rails, Standard; #91616 & 91620 Chrome Shock Shafts; #91576 & 91577 Fox Shock Bodies; RC Speed Secrets Ceramic Bearings & Screw Kit

:: For more setups, visit RC10.com and click on "Setup Sheets"