ENDURO

WITH TRAILING ARM SUSPENSION

GATEKEEPER BUGGY

OWNERS BUILD MANUAL

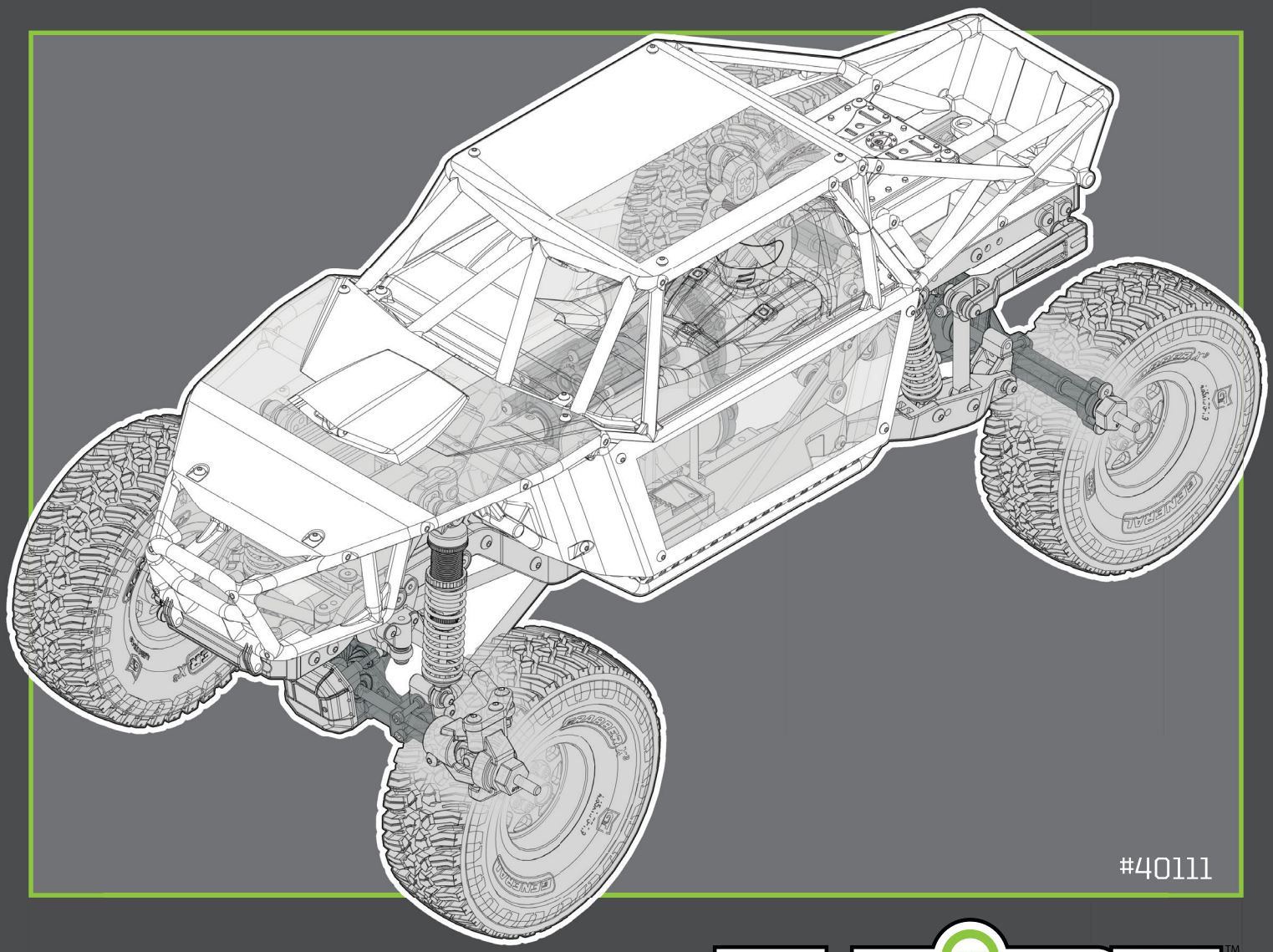

#40111

ELEMENT RC™

BY ASSOCIATED ELECTRICS

Associated Electrics, Inc.
21062 Bake Parkway.
Lake Forest, CA 92630

Customer Service
Tel: 949.544.7500
Fax: 949.544.7501

Follow Us On Social Media

ElementRC @Element_RC

www.ElementRC.com

AE is a Registered Trademark of Associated Electrics, Inc.

TEAM ASSOCIATED is a Registered Trademark of Associated Electrics, Inc.

REEDY is a Registered Trademark of Associated Electrics, Inc.

FACTORY TEAM is a Registered Trademark of Associated Electrics, Inc.

ELEMENT ™ is a Trademark of Associated Electrics, Inc.

AREA 51 is a Registered Trademark of Associated Electrics, Inc.

STEALTH is a Registered Trademark of Associated Electrics, Inc.

GREEN SLIME is a Registered Trademark of Associated Electrics, Inc.

ITEMS NEEDED

The following items are required to build or maintain your Enduro vehicle.

- 1.5mm Allen Wrench (#1500)
- 2mm Allen Wrench (#1501)
- 2.5mm Allen Wrench (#1503)
- Pliers
- Long Nose Pliers
- 5.5mm Nut Driver (#1507)
- 7mm Nut Driver (#1508)

OTHER HELPFUL ITEMS

The following items aren't required, but will aid in the building and maintaining of your Enduro vehicle.

- Threadlock (#1596) *Not Included
- Green Slime (#1105) *Not Included

Your journey begins here.

INTRODUCTION

Thank you for purchasing this Element RC product. This assembly manual contains instructions and tips for building and maintaining your new Enduro chassis. Please take a moment to read through this manual to help familiarize yourself with these steps. We are continually changing and improving our designs; therefore, actual parts may appear slightly different than in the illustrations. New parts will be noted on supplementary sheets located in the appropriate parts bags.

GATEKEEPER KIT

A performance rig built to endure. When hitting the trail, you want to do it with performance and confidence. So, we bring you the all-new Enduro Gatekeeper Kit!

Aimed towards the serious RC rock crawler enthusiast, the new Enduro Gatekeeper kit is packed full of performance features that are sure to impress.

What makes the Enduro Gatekeeper kit special? It's the all-new Gatekeeper Suspension package (GKS™). This package consist of rear trailing arms that move the shocks forward, allowing a larger window for shock tuning and providing improved weight bias. The trailing arms are paired with a rear anti-roll bar for a more stable and consistent suspension when crawling on the rocks. An adjustable aluminum track bar mount firmly bolted to the chassis rail gives the Enduro GK more reliable and responsive steering without the flex. Our shock mount inserts with multiple mounting positions allow for precise suspension tuning whether it's moving the shocks up, down, forward, or back.

The performance doesn't stop there. The Enduro GK is built on our proven stamped steel C-channel Enduro chassis and retains the same awesome features with the addition of hard plastic components and machined steel pivot balls.

The behind-the-axle (BTA) steering link greatly improves approach angle and front-end clearance, making rough terrain much easier to handle. The Stealth® X transmission features the ability to adjust the rear drive ratio independently of the front drive in 3 levels: stock overdrives the front end 5.7%, option 1 provides a one-to-one drive ratio front to rear and option 2 overdrives the front end 11.83%.

Feeding the power to the tires are 3-piece telescopic driveshafts with an extruded aluminum center section, universal front drive axles, and hardened steel ring and pinion gears. With the Enduro GK drivetrain, delivering useful and reliable power will not be an issue.

The Enduro GK kit isn't just all about performance, it's got looks, too. The new Gatekeeper molded cage and polycarbonate panels are the perfect fit for a high-performance rock crawler or trail truck. The included interior with molded driver and passenger heads, along with detailed decal sheet, give the Gatekeeper body awesome scale looks. The removable hinged body mount makes accessing the electronics and working on the chassis a breeze, whether out on the trail or in the garage.

With all these amazing features packed in one box, we know the Enduro Gatekeeper Kit is a high-performance rock crawling machine that's ready to take on the terrain. – Are you?

FEATURES

- Behind-the-axle (BTA) steering
- Aluminum steering plates
- CMS (Chassis Mounted Steering)
- Steel 25T servo horn
- Integrated servo winch mount
- Threaded aluminum shock bodies
- Stamped steel frame rails
- Aluminum motor plate
- Optimized ball cups for more fluid axle articulation
- Telescopic driveshafts front and rear
- Extruded aluminum driveshaft splines
- One-piece rear axle design
- Splined front axle with adjustable caster
- Universal front drive axles
- Machined input pinion gear
- Metal ring gear
- Machined steel top shaft
- Heavy duty 5mm diameter steel links
- Metal ball bearings

HARDWARE 1:1 SCALE VIEW

HARDWARE USED WITH OPTIONAL REPLACEMENT PART NUMBERS

FLAT HEAD SCREWS (FHCS)

2.5x10mm (31350)

2.5x14mm (41077)

3x8mm (25201)
Titanium (91592)

3x10mm (25202)
Aluminum (8555)
Titanium (91593)

3x12mm (25203)
Aluminum (8556)
Titanium (91594)

3x14mm (89208)
Aluminum (8567)
Titanium (91595)

3x24mm (89233)

SOCKET HEAD SCREWS (SHCS)

2x5mm (31511)
Aluminum (8566)

2x8mm (7187)

2.5x6mm (41079)

2.5x10 (41087)

2.5x14 (71032)

2.5x16 (41086)

LP SOCKET HEAD SCREWS (LP SHCS)

3x6mm (41089)

3x10mm (41090)

3x20mm (41091)

SET SCREWS

3x3mm (25225)

3x16mm (4689)

PIVOT BALLS

Pivot Ball, 6mm (42041)
FT Pivot Ball, 6mm (42056)

Pivot Ball, Upper Shock (42041)
FT Pivot Ball, Upper Shock (42055)

BUTTON HEAD SCREWS (BHCS)

2.5x10mm (41088)

3x5mm (31530)

3x6mm (31531)
Titanium (91580)

3x8mm (31532)
Titanium (91581)

3x10mm (25211)
Titanium (91582)

3x12mm (89202)
Titanium (91583)

3x14mm (25187)
Titanium (91584)

3x16mm (89203)
Titanium (91585)

3x18mm (2308)

3x20mm (25188)
Titanium (91587)

3x22mm (25189)

3x24mm (89204)

3x28mm (41078)

LOCK NUTS

M3 Nuts (91477)
M3 Locknuts (25215)
Aluminum (31550)

M4 Locknut W/Flange (25391)

BEARINGS

5x10x4mm (91560)

7x14x3.5mm (91474)

10x15x4mm (91563)

SHIMS AND WASHERS

3x7mmx1mm (42260)

3x7mmx2mm (42260)

3x7x3mm (42260)

3x7x5mm (42260)

3x7x7mm (42260)

Drive Gear Shim (42027)

MISC. SCREWS

Shoulder Screw 3x4x10mm (42070)

Screw Pin (42022)

LINKS

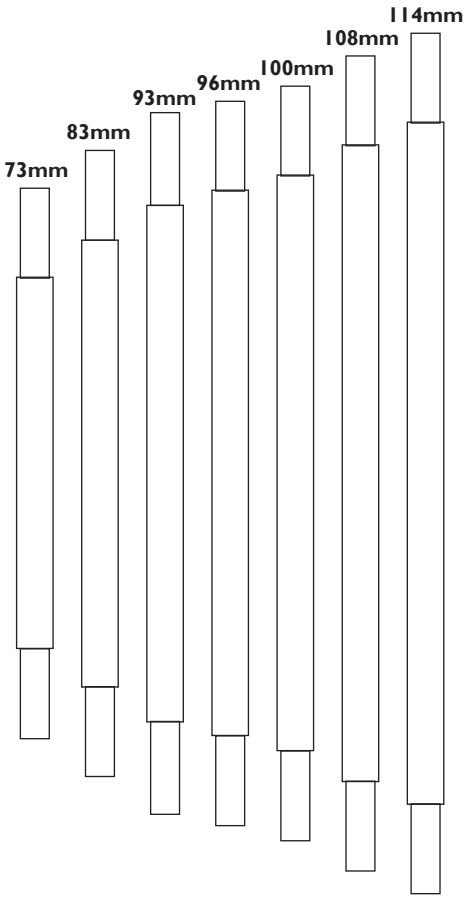

TABLE OF CONTENTS

8/20/2020

01 COVER

02 INTRODUCTION

03 1:1 HARDWARE “FOLD OUT”

04 TABLE OF CONTENTS

05 CHASSIS BUILD (BAG 1, 2)

06 ELECTRONIC MOUNTS BUILD (BAG 3)

06 GEARBOX BUILD (BAG 4)

08 FRONT AXLES BUILD (BAG 5)

08 REAR AXLES BUILD (BAG 6)

09 LINKS BUILD (BAG 7)

12 DRIVESHAFTS BUILD (BAG 8)

13 SHOCKS BUILD (BAG 9)

15 CAGE BUILD (BAG 10)

18 CATALOG

28 OPTIONAL GEARBOX BUILD

29 TRAIL TIPS

30 BACK COVER

USING THIS MANUAL

This symbol indicates a special note or instruction in the manual.

x2 This symbol indicates the number of the same part that is required.

2 This symbol indicates the order within a step to assemble parts.

This symbol indicates a Trail Tip.

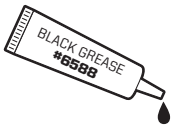

This symbol indicates where Black Grease should be applied.

This symbol indicates where Green Slime can be applied.

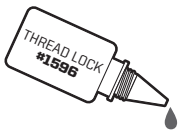

This symbol indicates where Thread Lock Adhesive should be applied.

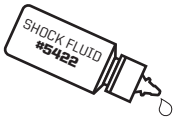

This symbol indicates where Shock Fluid should be applied.

There is a 1:1 hardware foldout page in the front of the manual. To check the size of a part, line up your hardware with the correct drawing until you find the exact size. Each part in the foldout has a number assigned to it for ordering replacement parts.

GATE 01 CHASSIS BUILD: BAGS 1, 2

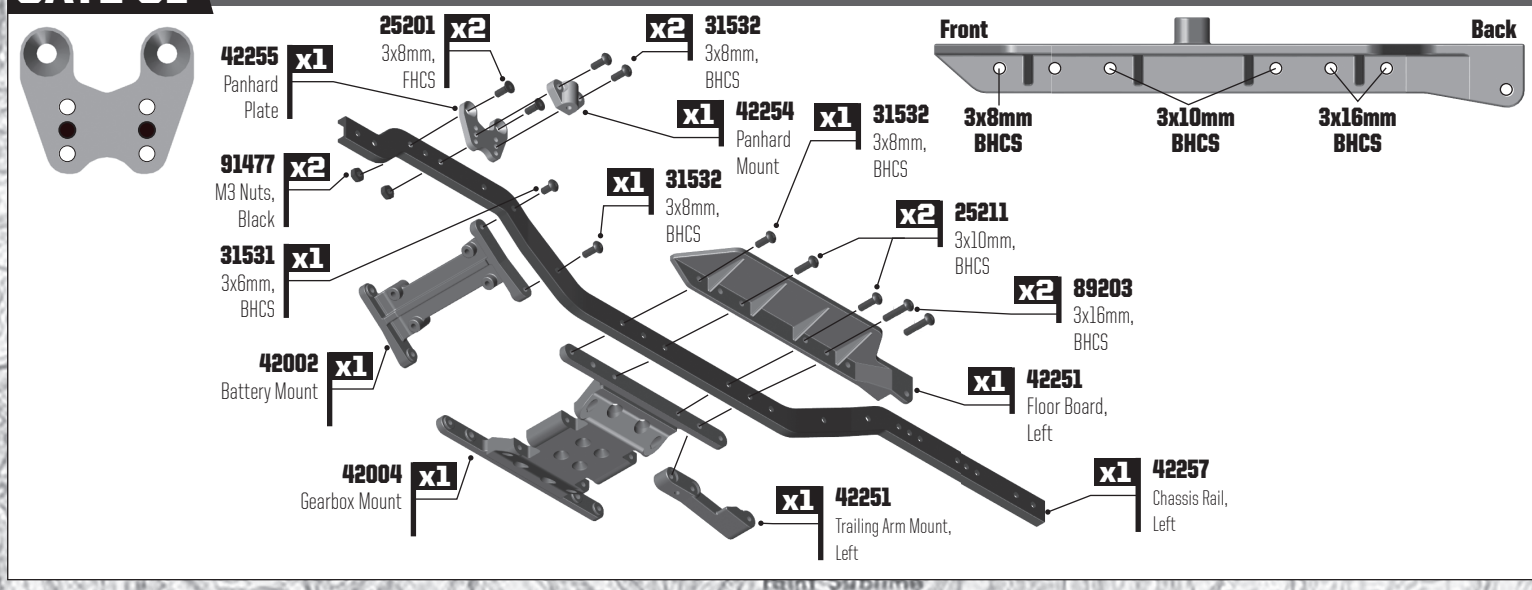

GATE 02 CHASSIS BUILD: BAGS 1, 2

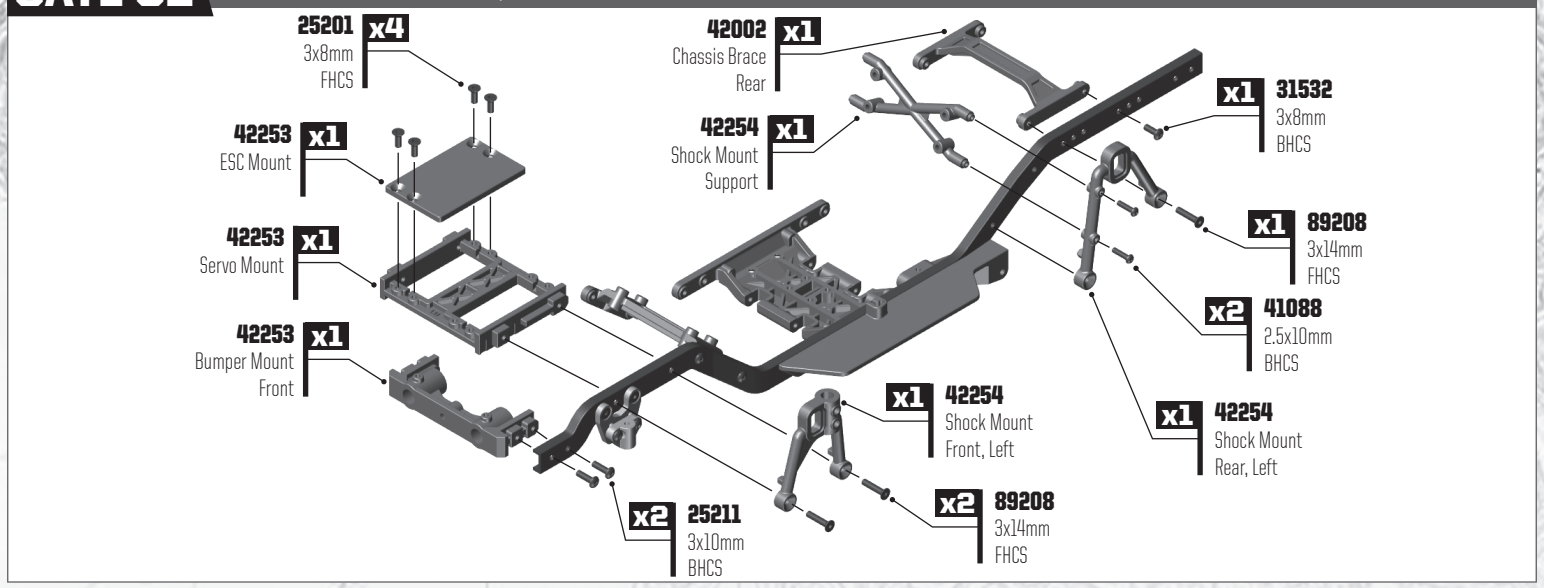

GATE 03 CHASSIS BUILD: BAGS 1, 2

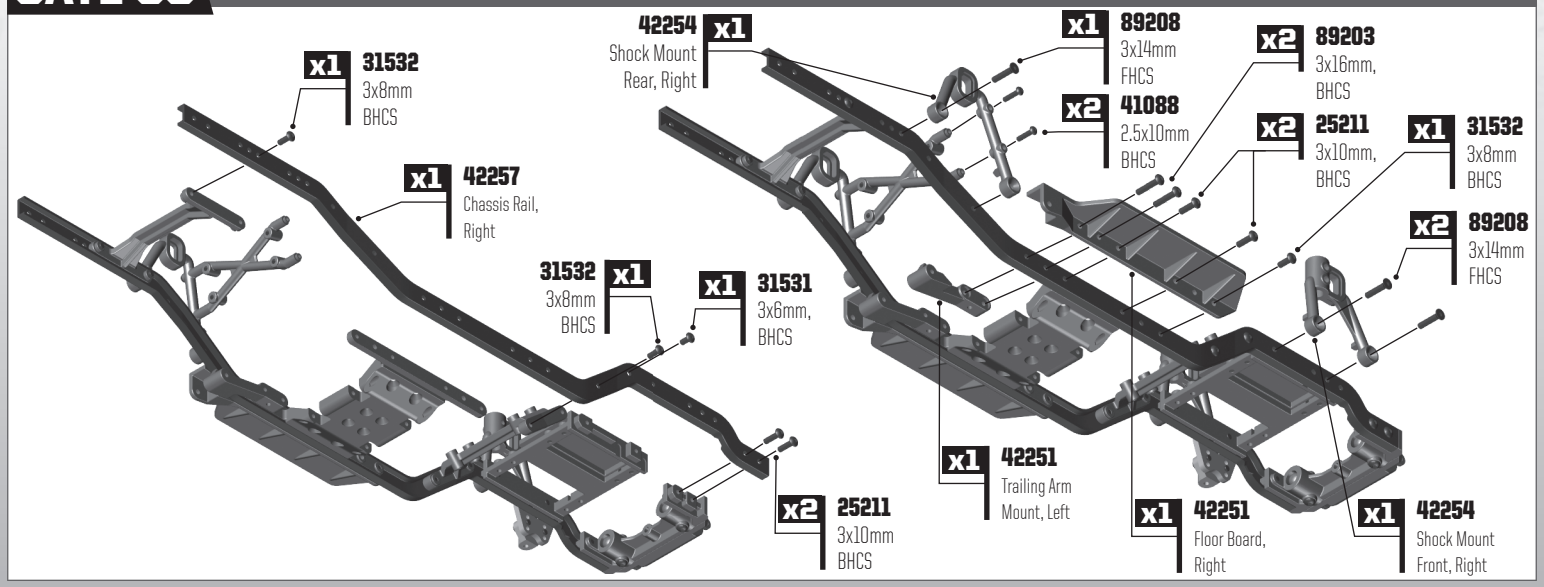

GATE 01 ELECTRONIC MOUNTS BUILD: BAG 3

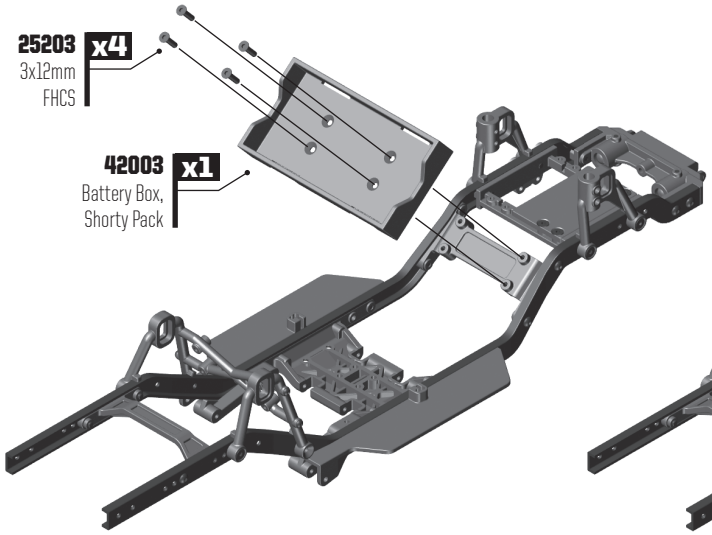

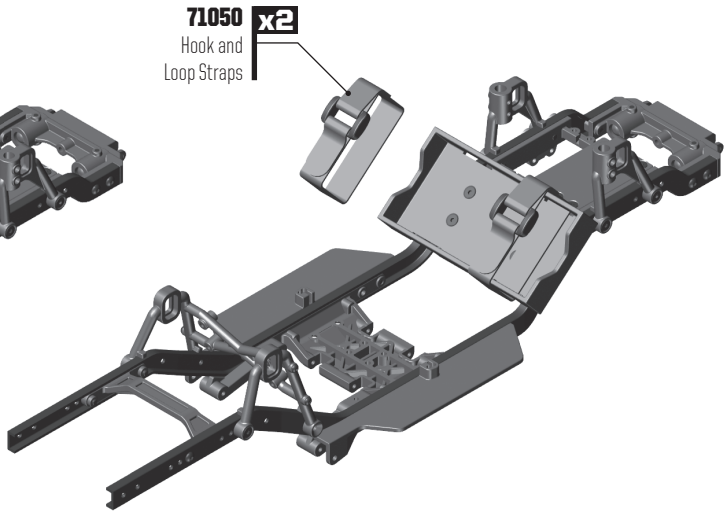

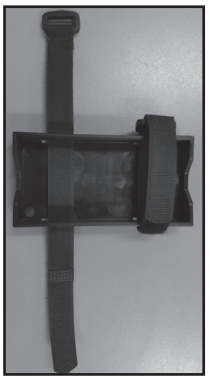

GATE 02 ELECTRONIC MOUNTS BUILD: BAG 3

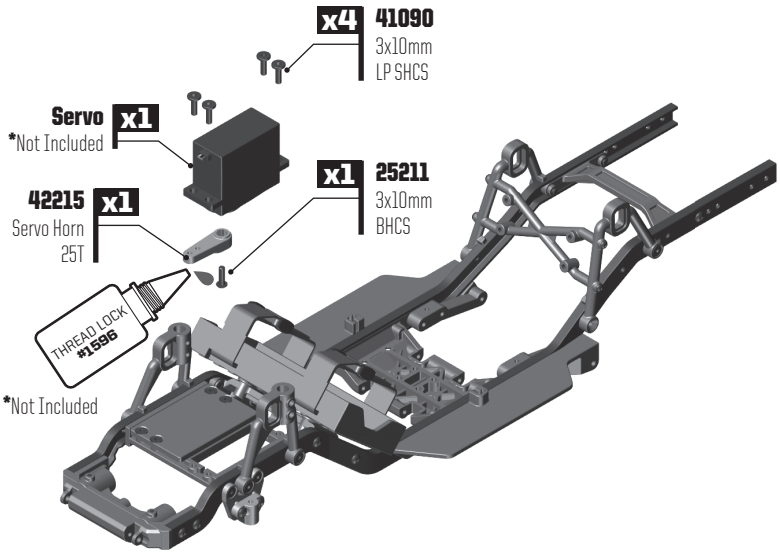

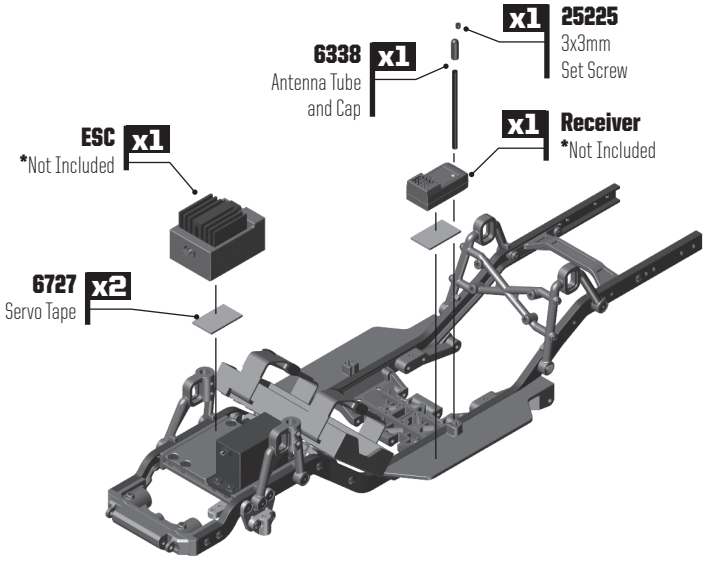

GATE 01 GEARBOX BUILD: BAG 4

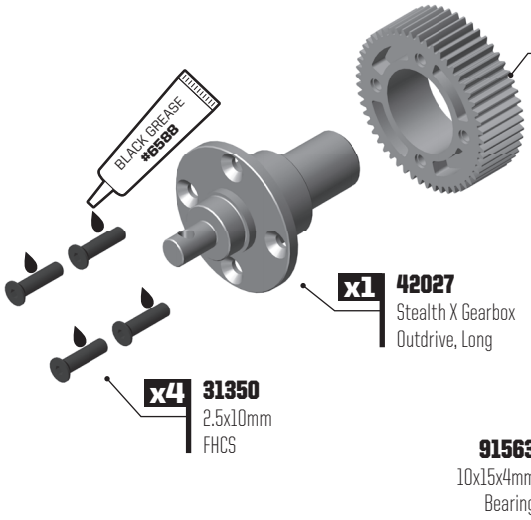

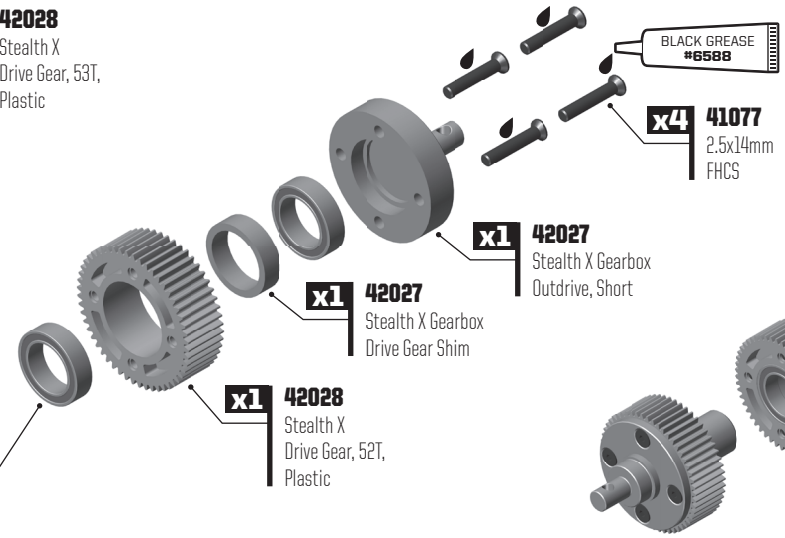

GATE 02 GEARBOX BUILD: BAG 4

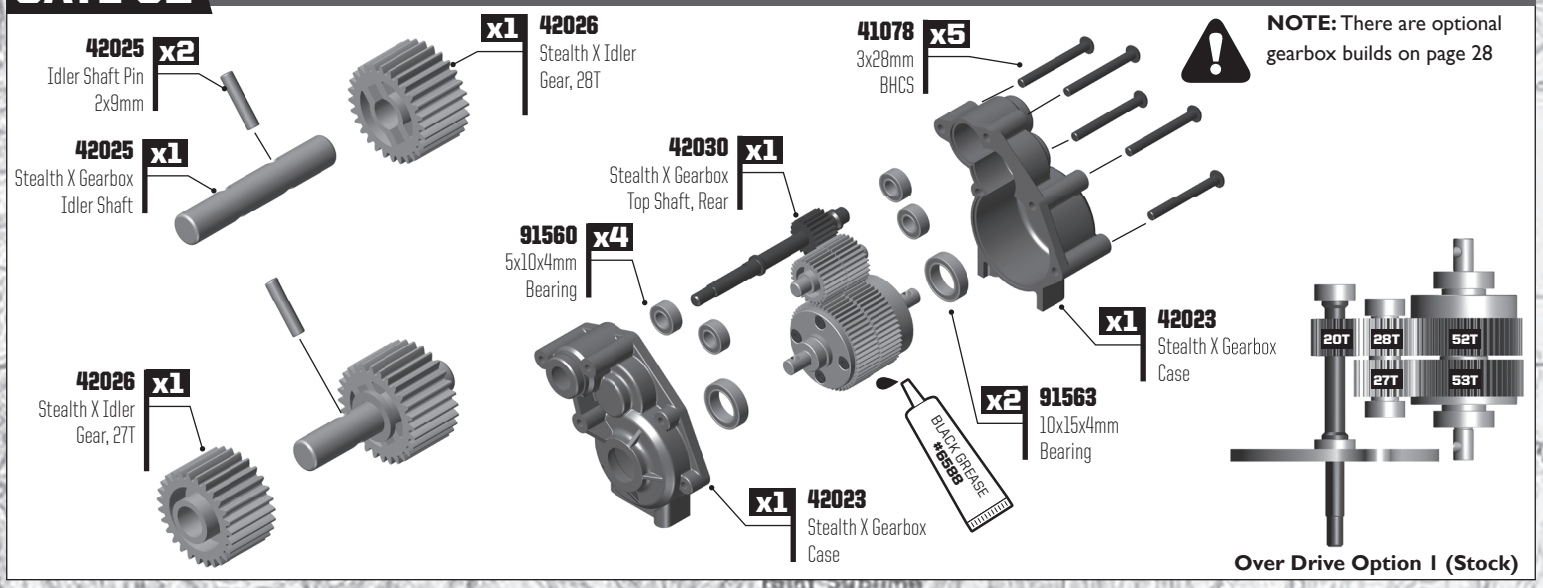

NOTE: There are optional gearbox builds on page 28

Over Drive Option 1 (Stock)

GATE 03 GEARBOX BUILD: BAG 4

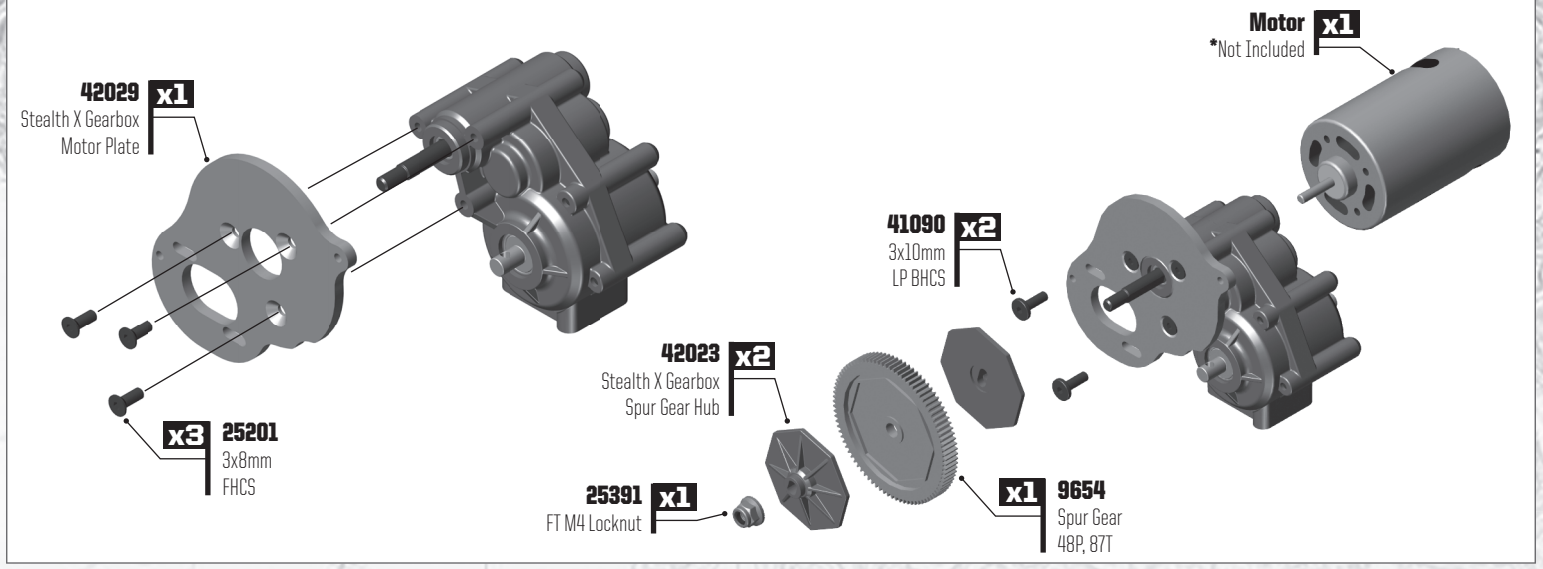

GATE 04 GEARBOX BUILD: BAG 4

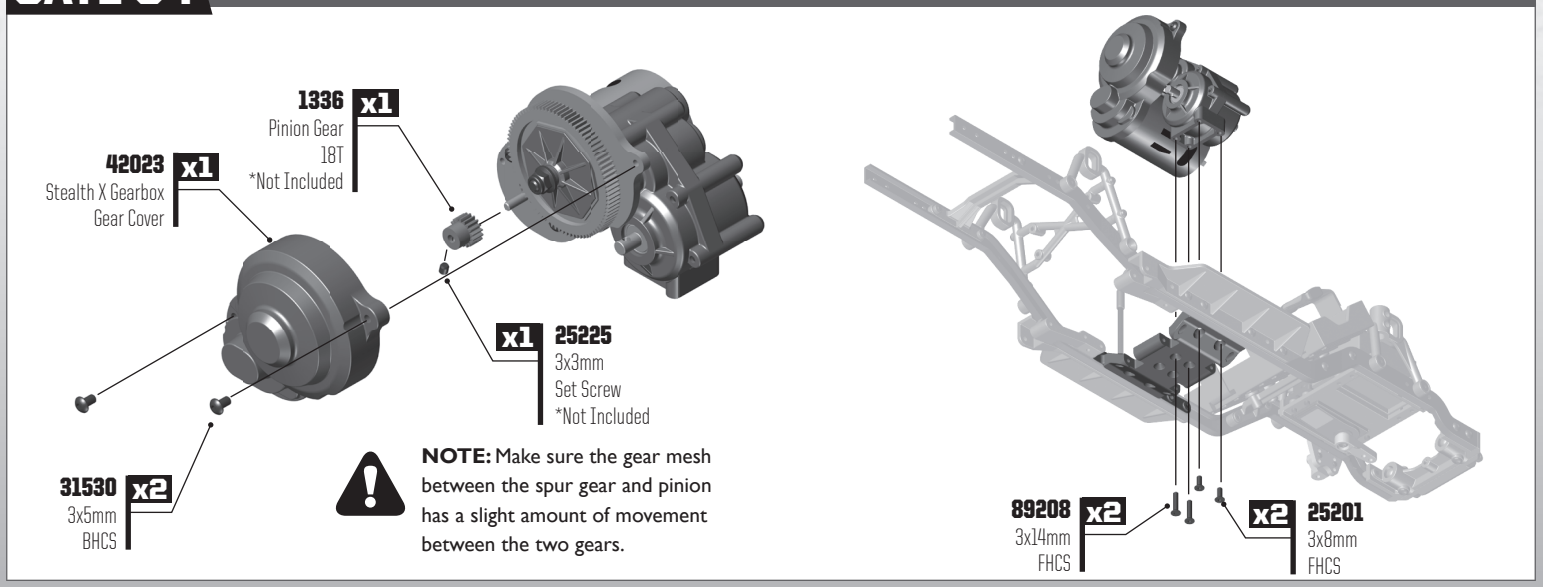

NOTE: Make sure the gear mesh between the spur gear and pinion has a slight amount of movement between the two gears.

GATE 01 FRONT AXLE BUILD: BAG 5

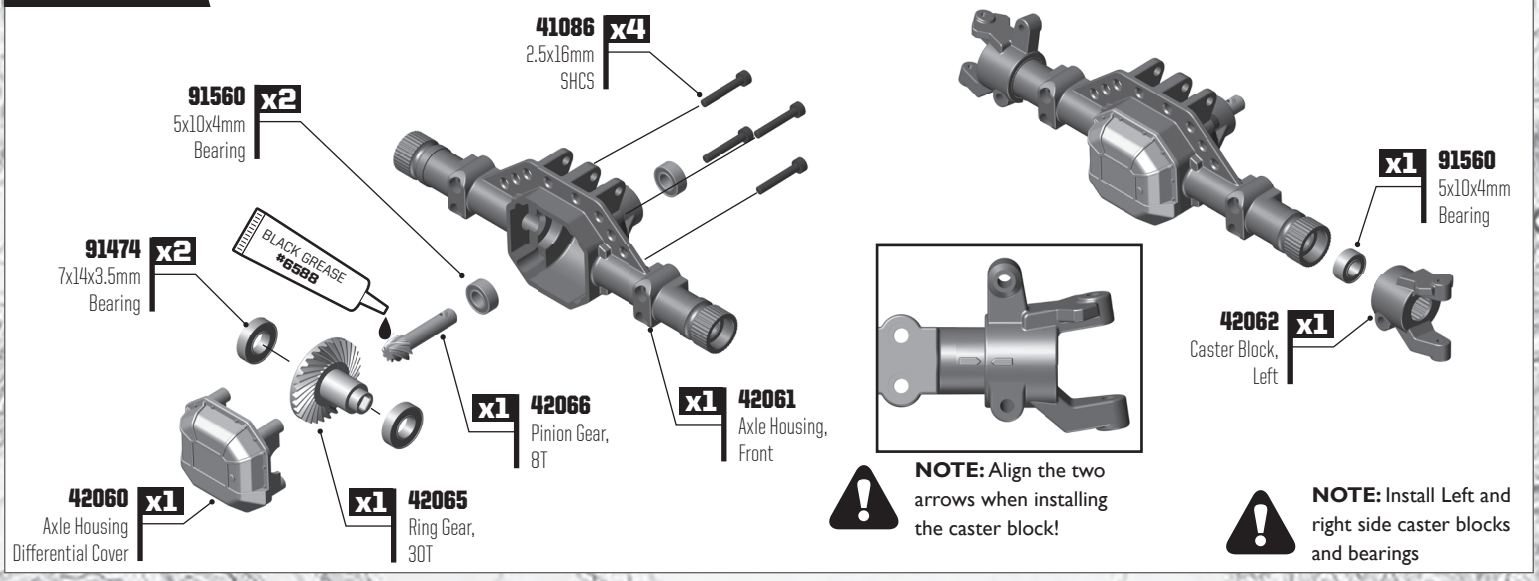

GATE 02 FRONT AXLE BUILD: BAG 5

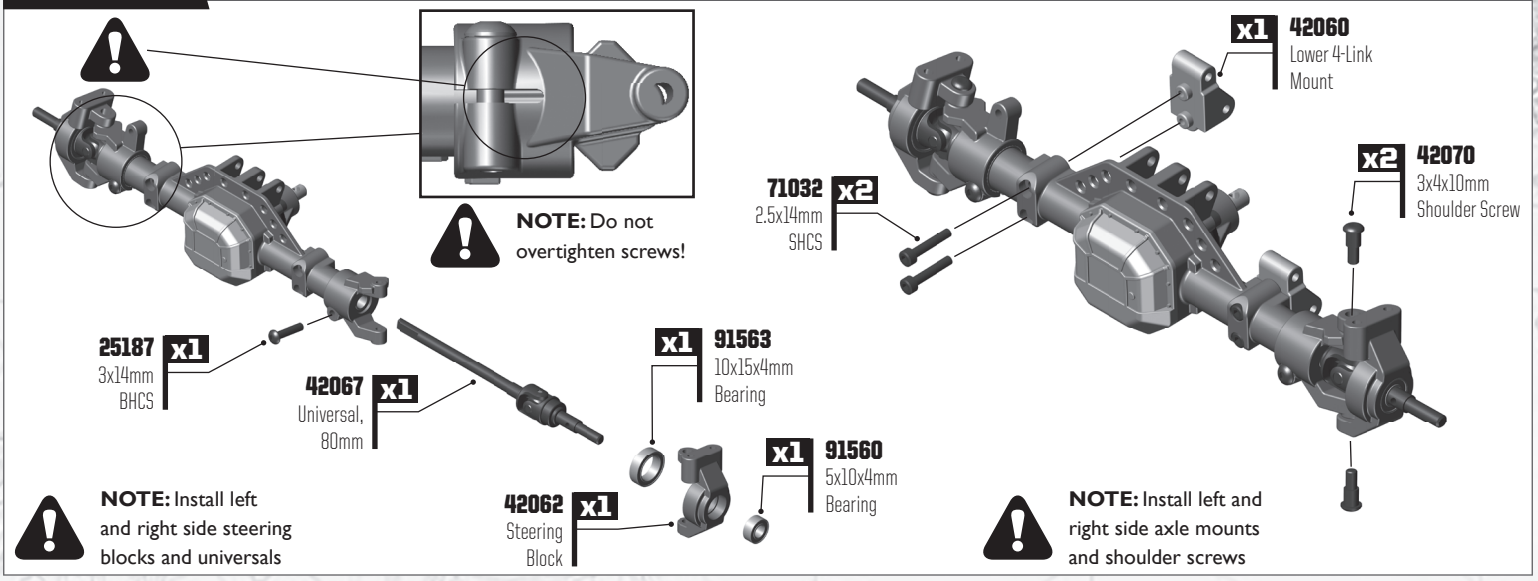

GATE 03 FRONT AXLE BUILD: BAG 5

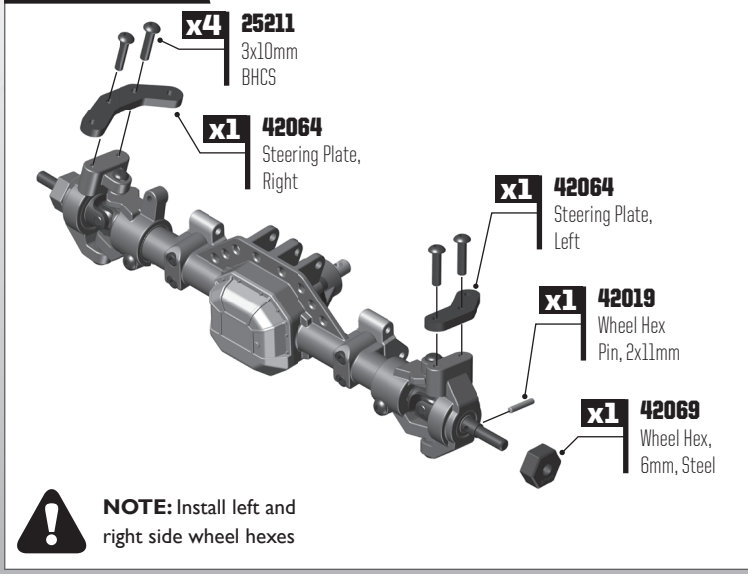

GATE 01 REAR AXLE BUILD: BAG 6

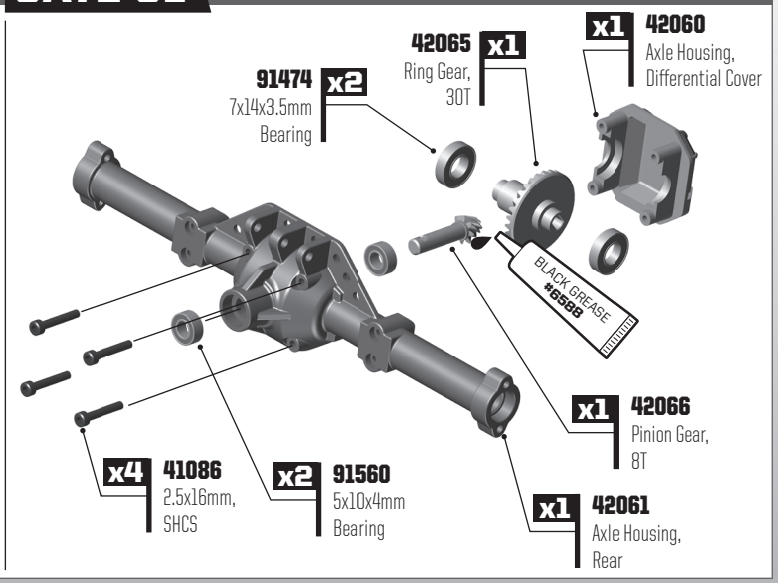

GATE 02 REAR AXLE BUILD: BAG 6

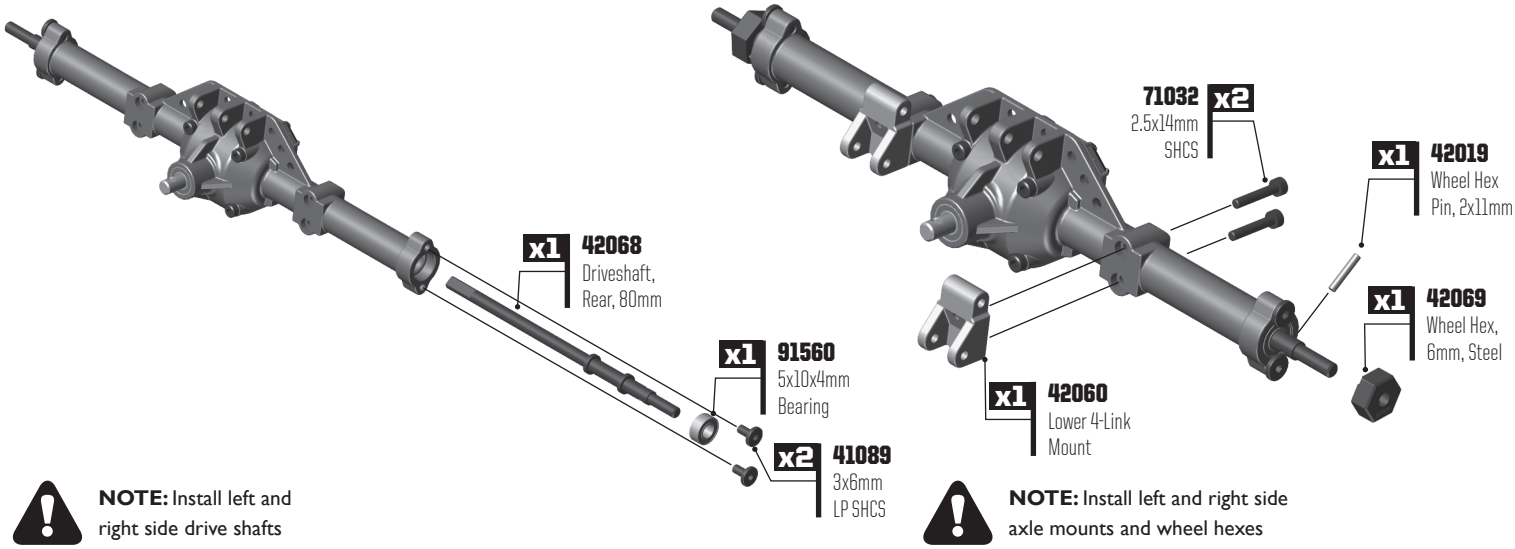

NOTE: Install left and right side drive shafts

NOTE: Install left and right side axle mounts and wheel hexes

GATE 01 LINKS BUILD: BAG 7

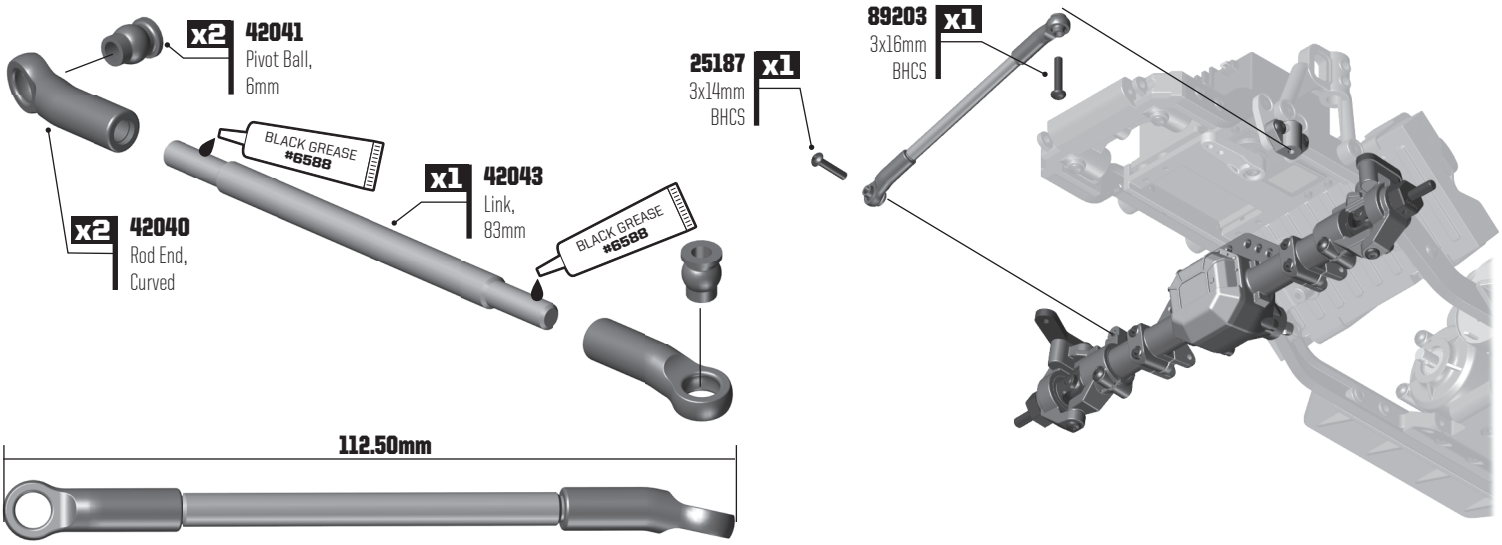

GATE 02 LINKS BUILD: BAG 7

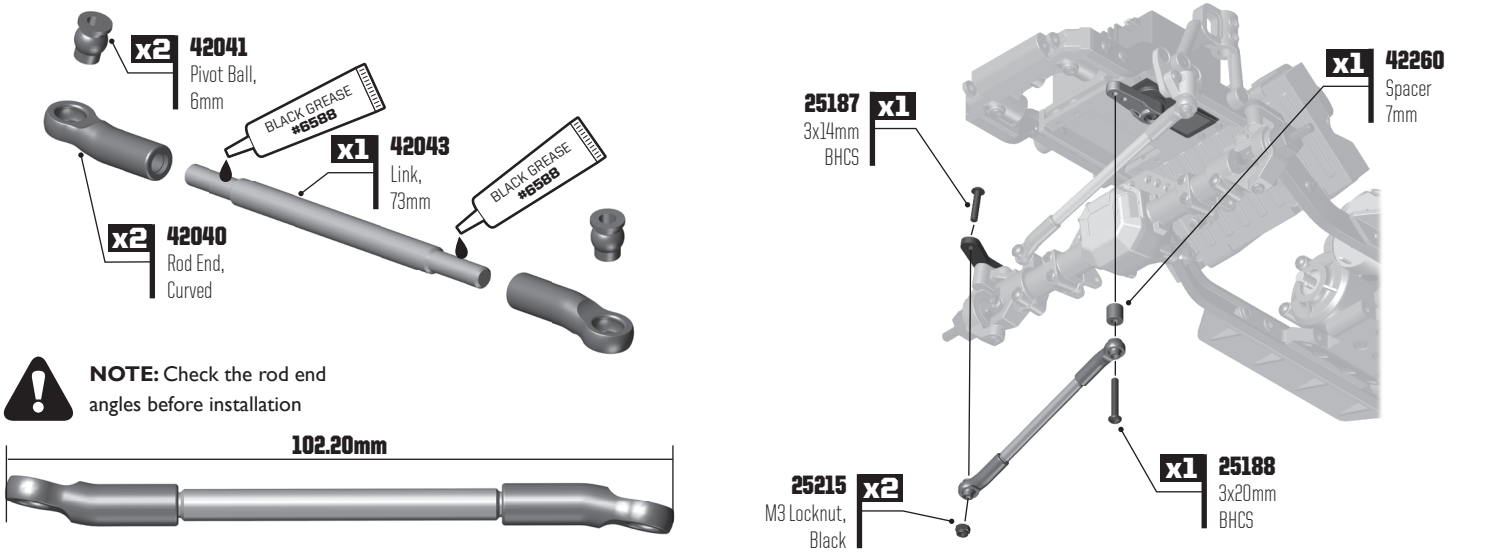

NOTE: Check the rod end angles before installation

GATE 03 LINKS BUILD: BAG 7

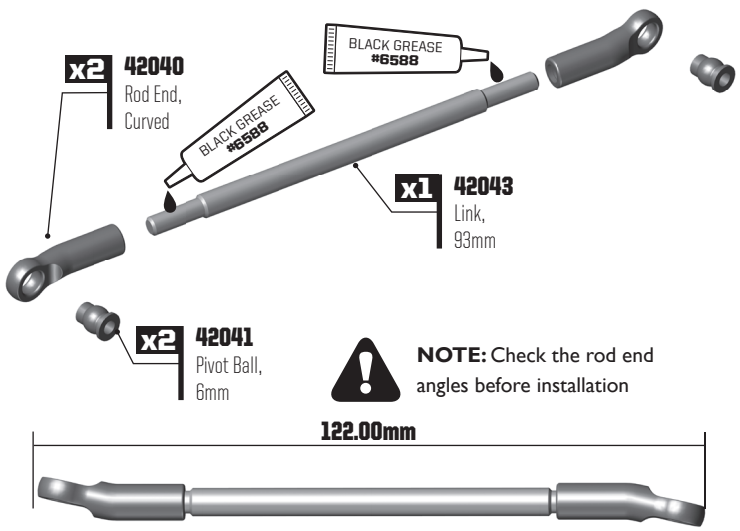

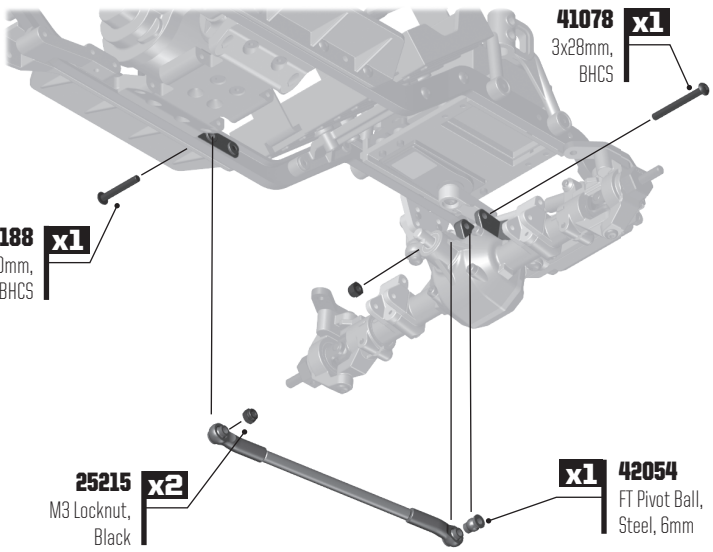

GATE 04 LINKS BUILD: BAG 7

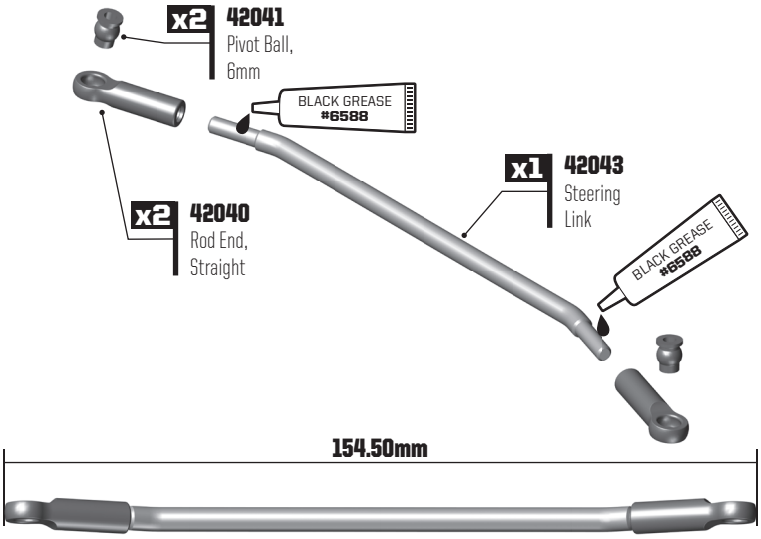

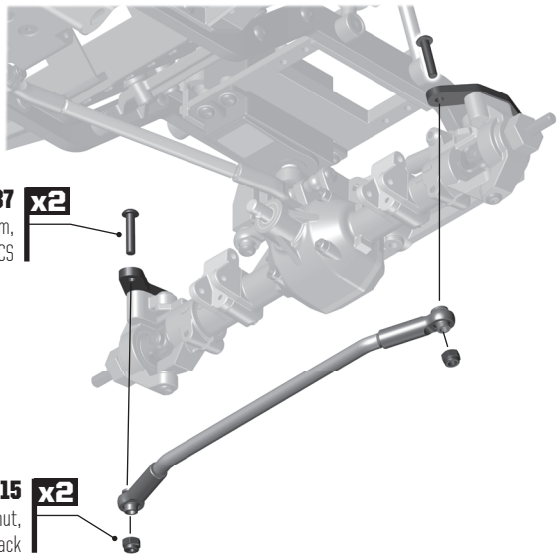

GATE 05 LINKS BUILD: BAG 7

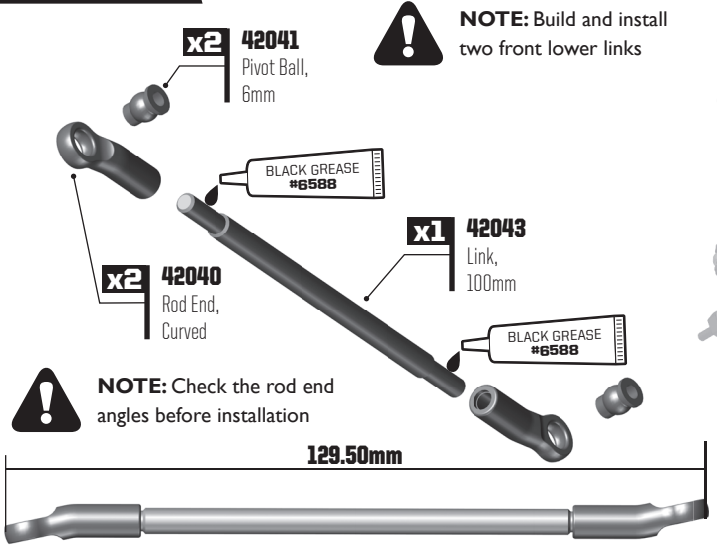

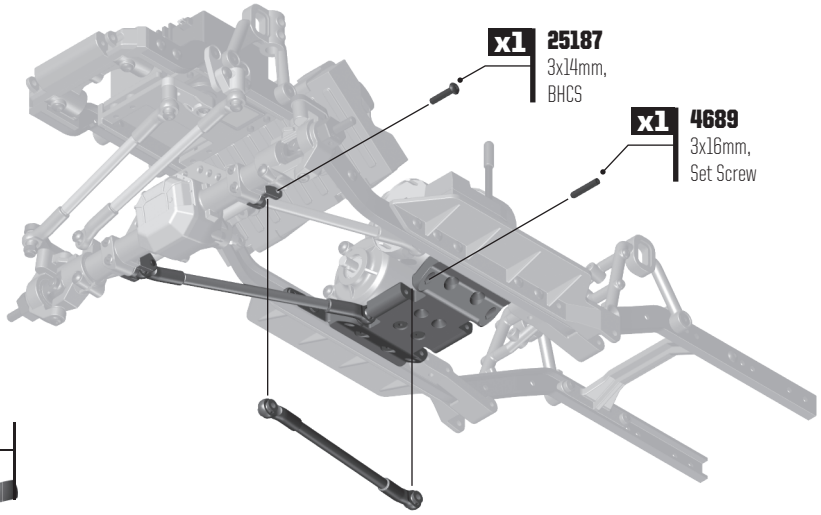

GATE 06 LINKS BUILD: BAG 7

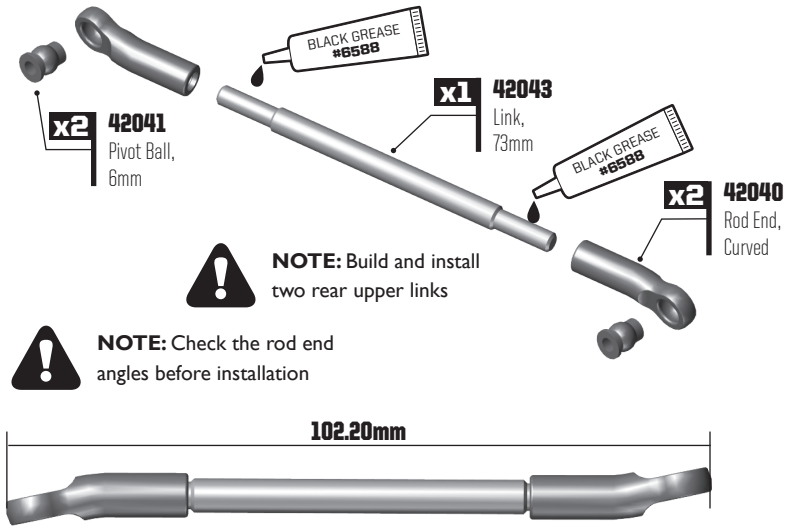

NOTE: Build and install two rear upper links

NOTE: Check the rod end angles before installation

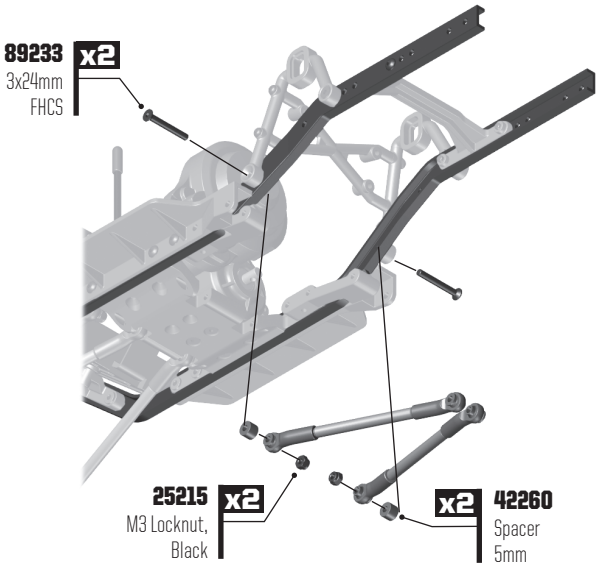

GATE 07 LINKS BUILD: BAG 7

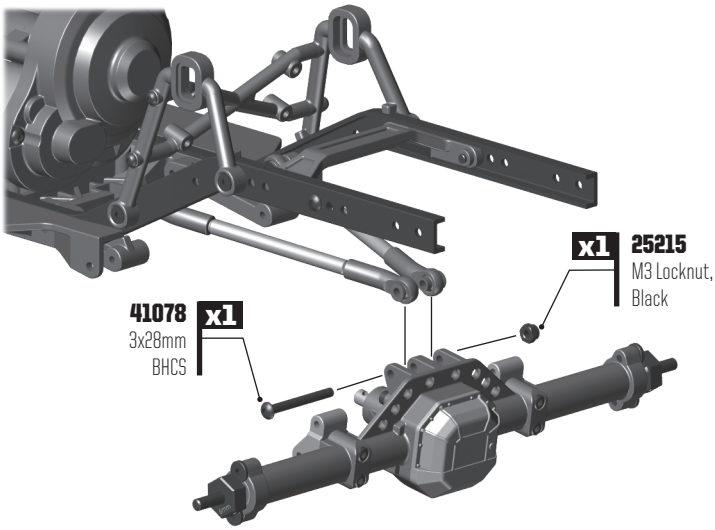

NOTE: Build and install two drop links

GATE 08 LINKS BUILD: BAG 7

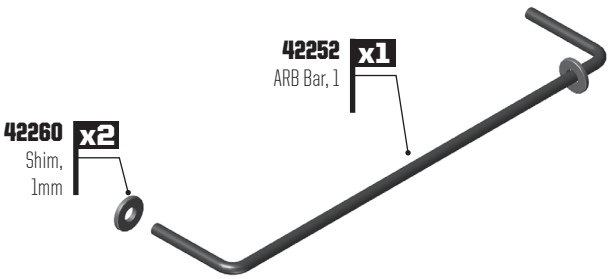

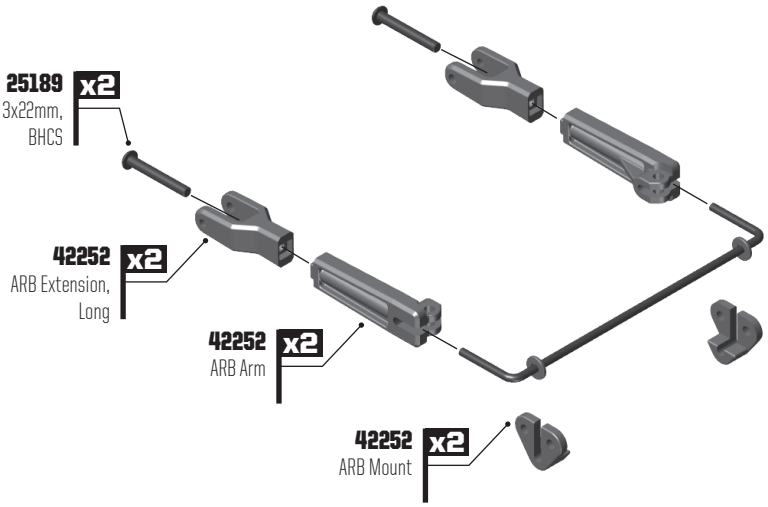

GATE 09 LINKS BUILD: BAG 7

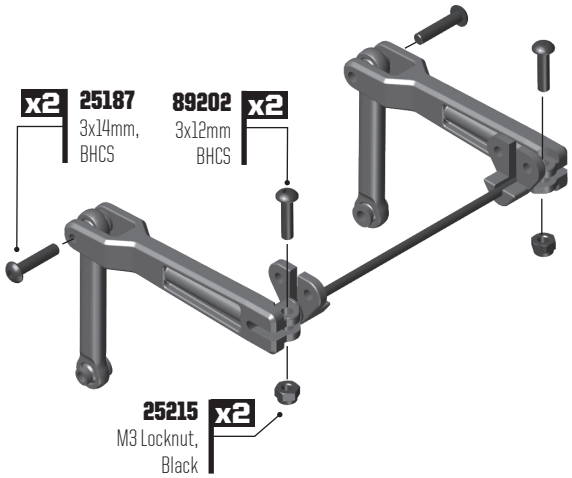

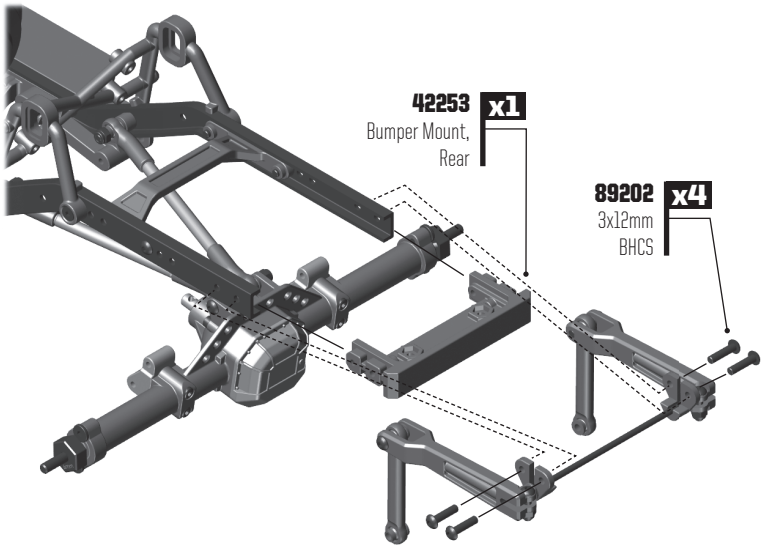

GATE 10 LINKS BUILD: BAG 7

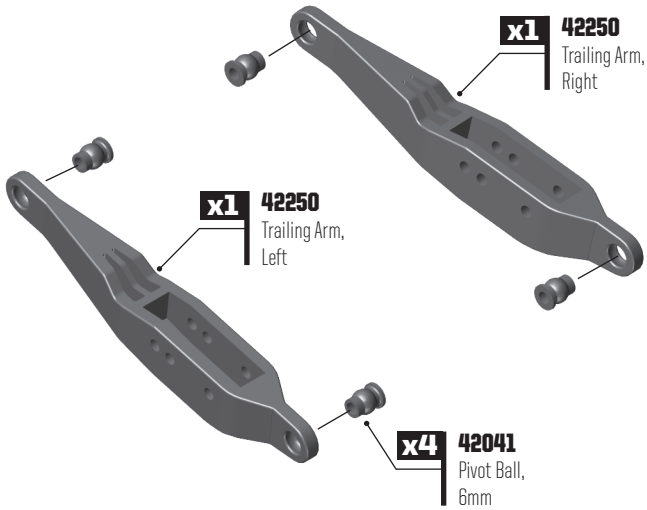

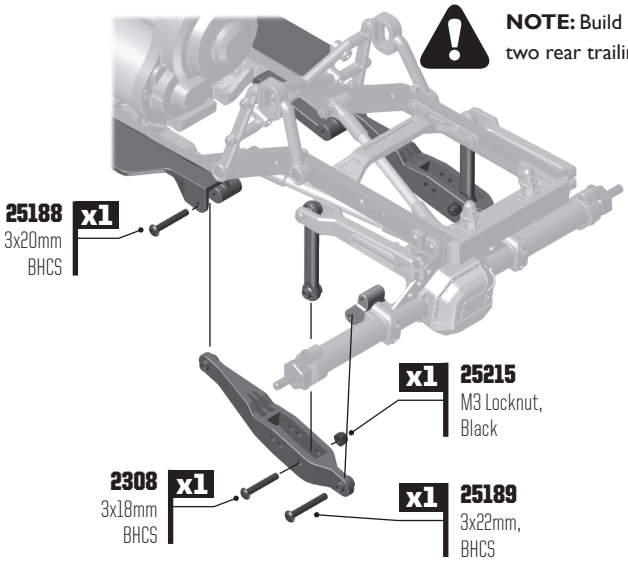

NOTE: Build and install two rear trailing arms

GATE 01 DRIVE SHAFT BUILD: BAG 8

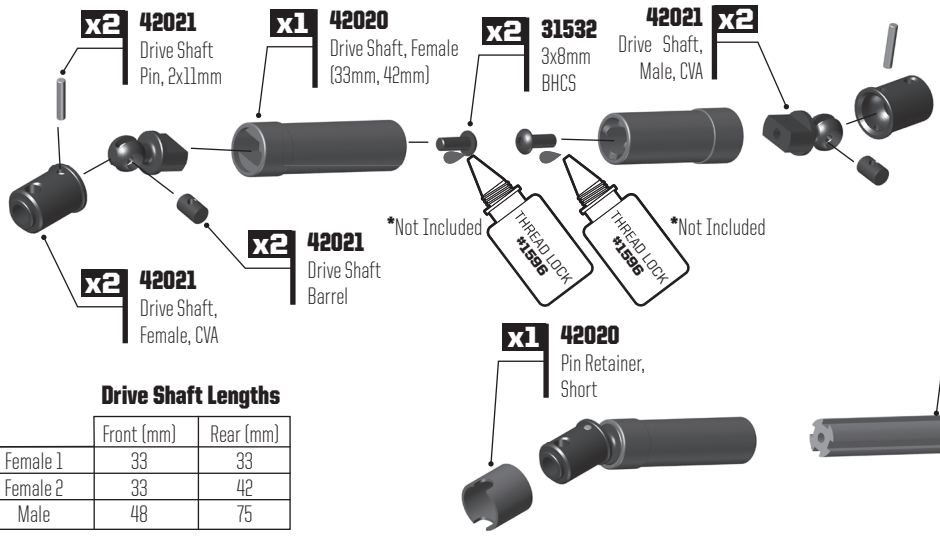

42020 Gearbox Side

42020 Axle Side

Drive Shaft Lengths

	Front (mm)	Rear (mm)
Female 1	33	33
Female 2	33	42
Male	48	75

NOTE: Build a front and rear drive shaft

GATE 02 DRIVESHAFT BUILD: BAG 8

NOTE: Make sure the screw pins are aligned with each female CVA during assembly

NOTE: Make sure the phasing of the drive shafts is correct when installing them to the axles and gearbox.

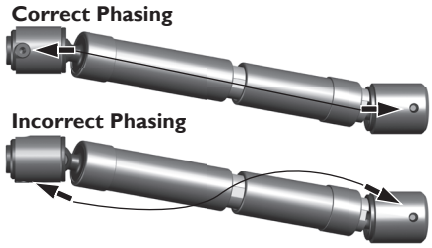

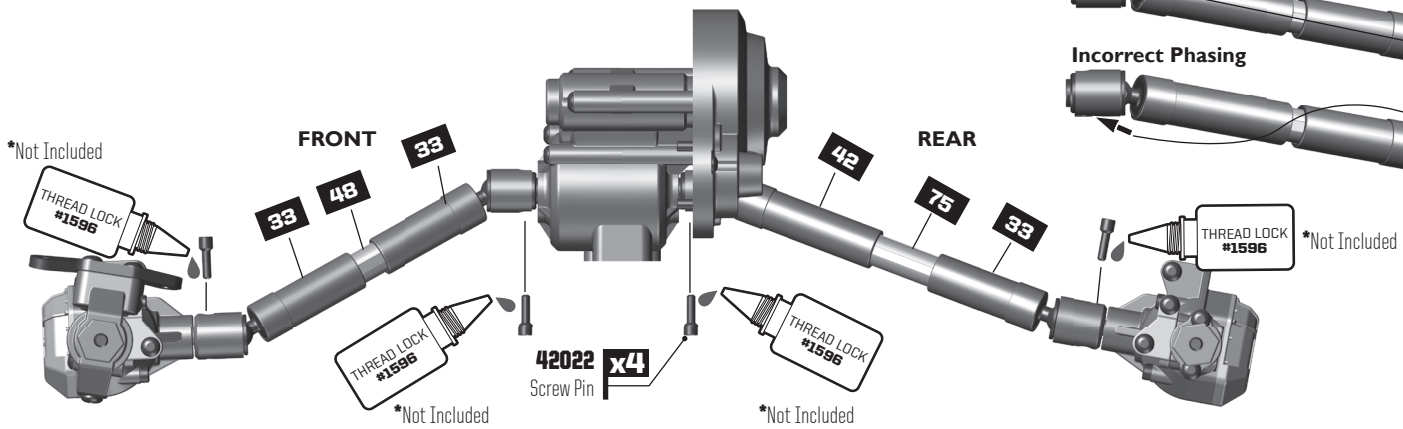

GATE 03 DRIVESHAFT BUILD: BAG 8

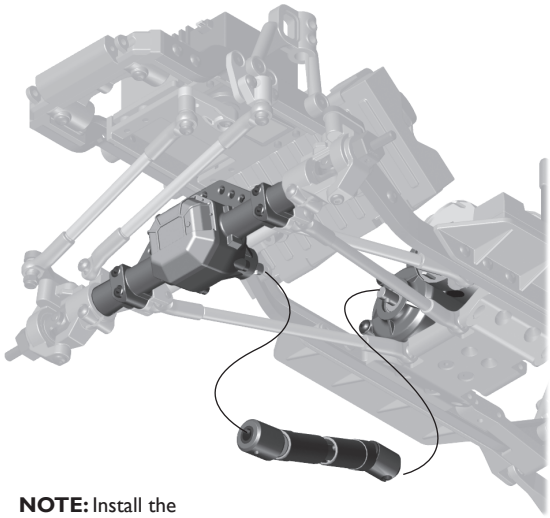

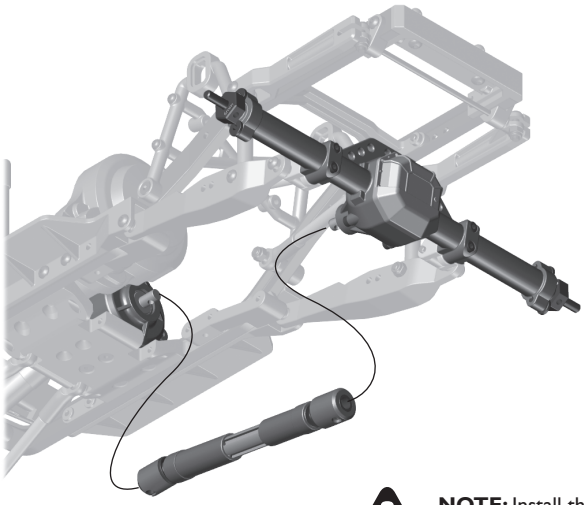

NOTE: Install the front drive shaft

NOTE: Install the rear drive shaft

GATE 01 SHOCK BUILD: BAG 9

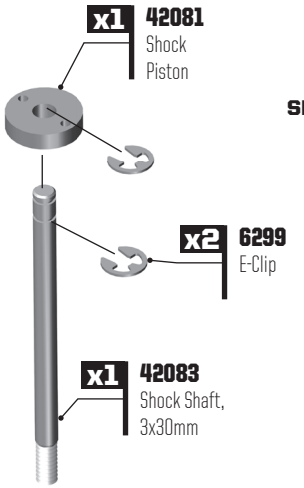

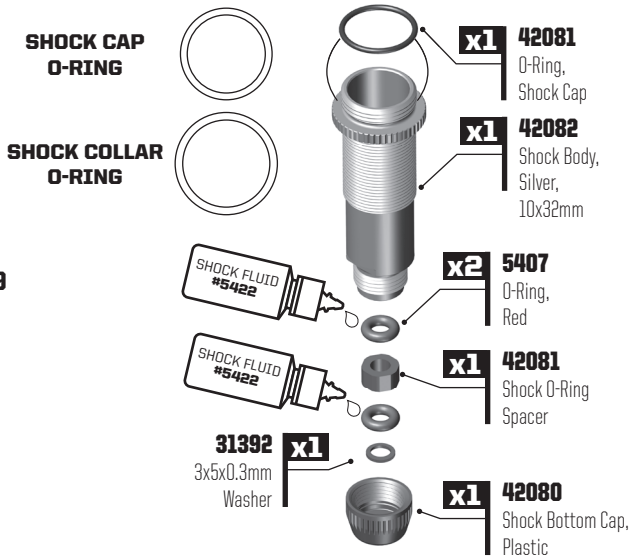

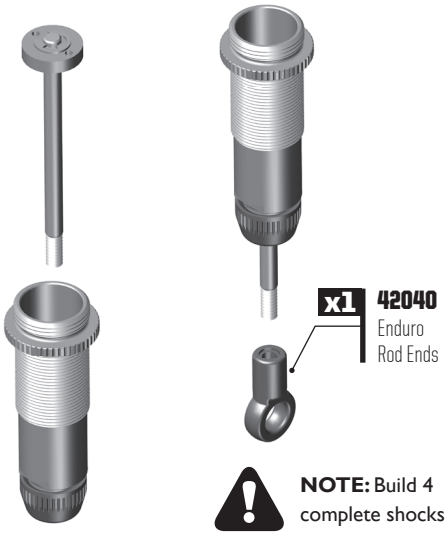

NOTE: Build 4 complete shocks

GATE 02 SHOCK BUILD: BAG 9

Shock Bleeding Steps:

1. Pull shock shaft down.
2. Fill shock body 3/4 full with shock fluid.
3. Slowly move the shock shaft up and down to remove air from under piston.
4. Wait for bubbles to come to surface.
5. Fill shock body to top with silicone fluid.
6. Place a drop of oil in the cap and on cap threads.
7. Install cap and tighten completely.
8. Slowly compress shaft all the way to the top. If there is pressure at the top of the stroke, there is too much oil or air. You must bleed it out.
9. Slowly pull shaft out.
10. Unscrew the cap 3/4 turn and tilt the shock at a slight angle.
11. Slowly compress the shaft to push out excess oil and air. You should see bubbles coming out from under the cap.
12. With the shaft compressed, tighten the cap and re-check for pressure at the top of the stroke. If there is still pressure, repeat steps 9 thru 11.

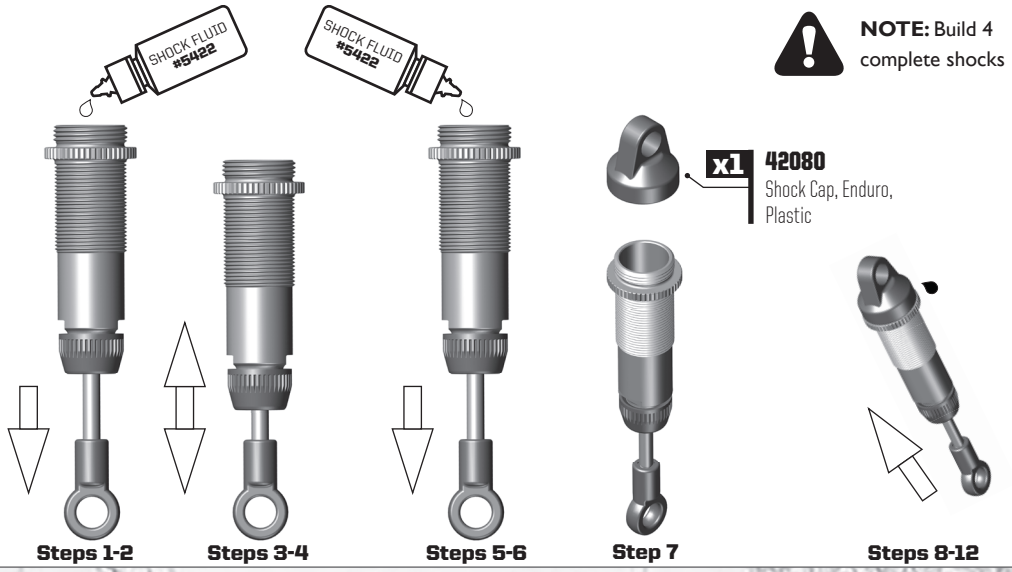

NOTE: Build 4 complete shocks

x1 **42080** Shock Cap, Enduro, Plastic

GATE 03 SHOCK BUILD: BAG 9

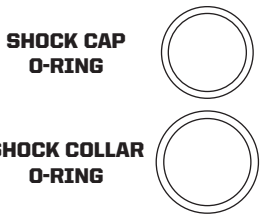

x1 **42081** O-Ring, Shock Collar

x1 **42079** Shock Collar, Black, Aluminum

Pro Tip: Use your finger to rub shock fluid on the o-ring for smoother adjustment.

x1 **42089** Front Shock Spring, Gray, 1.49 lb/in, 63mm

x1 **42090** Rear Shock Spring, Blue, 2.09 lb/in, 63mm

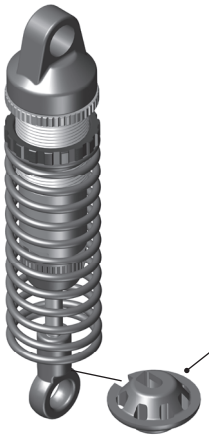

x1 **42080** Shock Spring Cup, Plastic

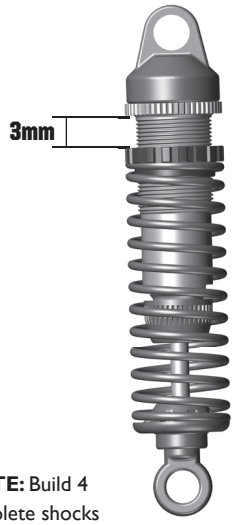

NOTE: Build 4 complete shocks

GATE 04 SHOCK BUILD: BAG 9

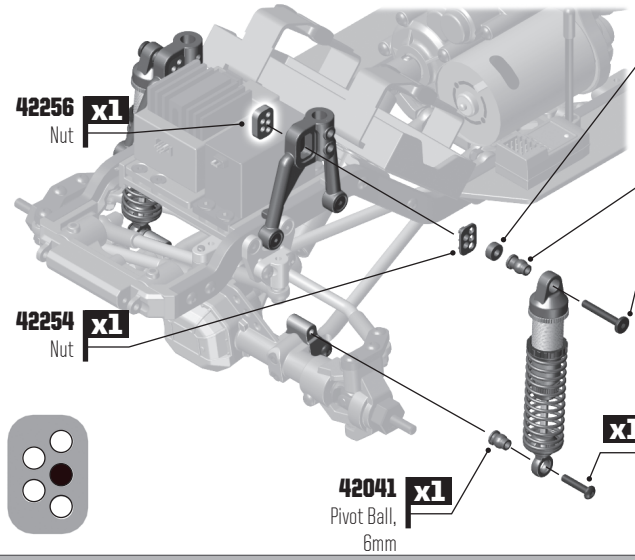

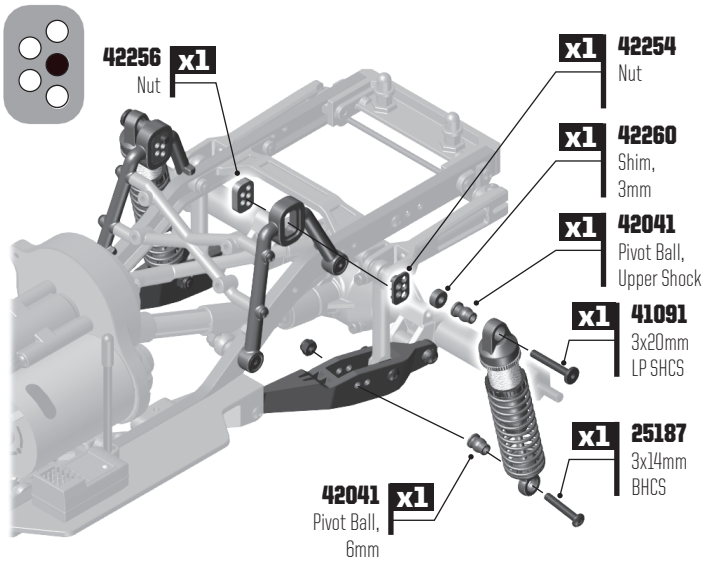

GATE 01 CAGE BUILD: BAG 10

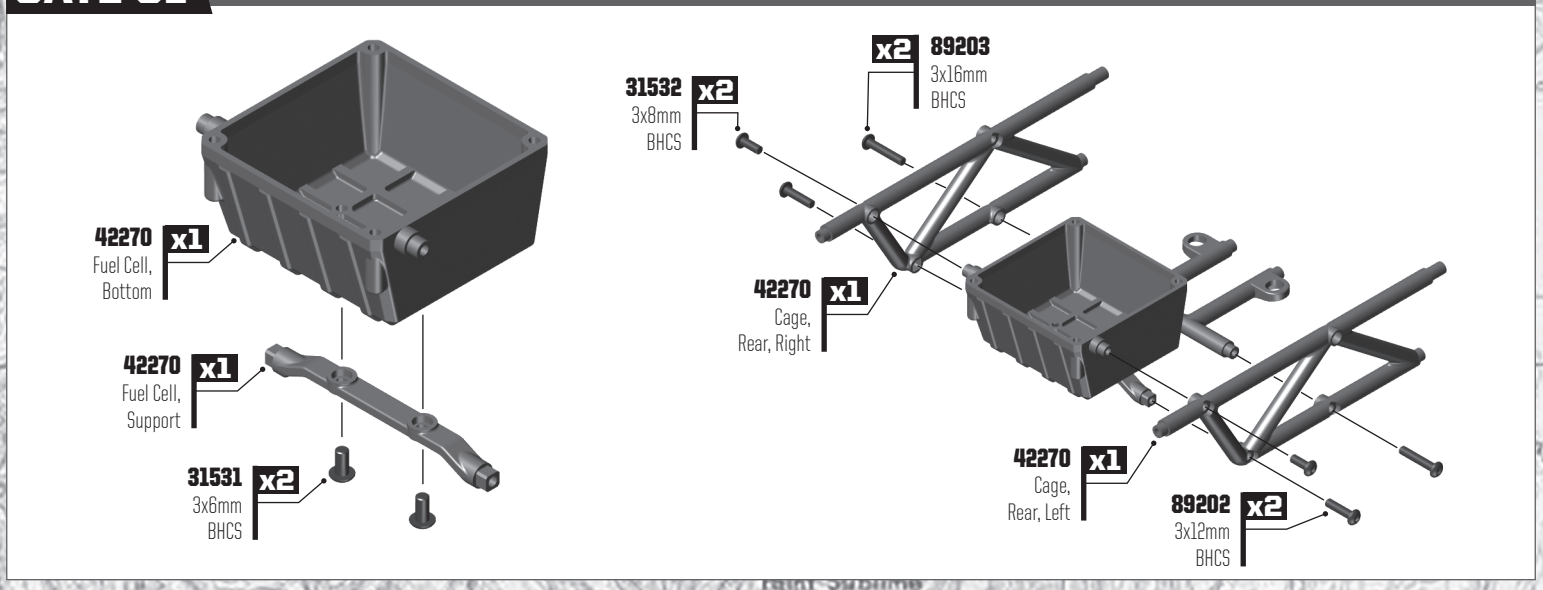

GATE 02 CAGE BUILD: BAG 10

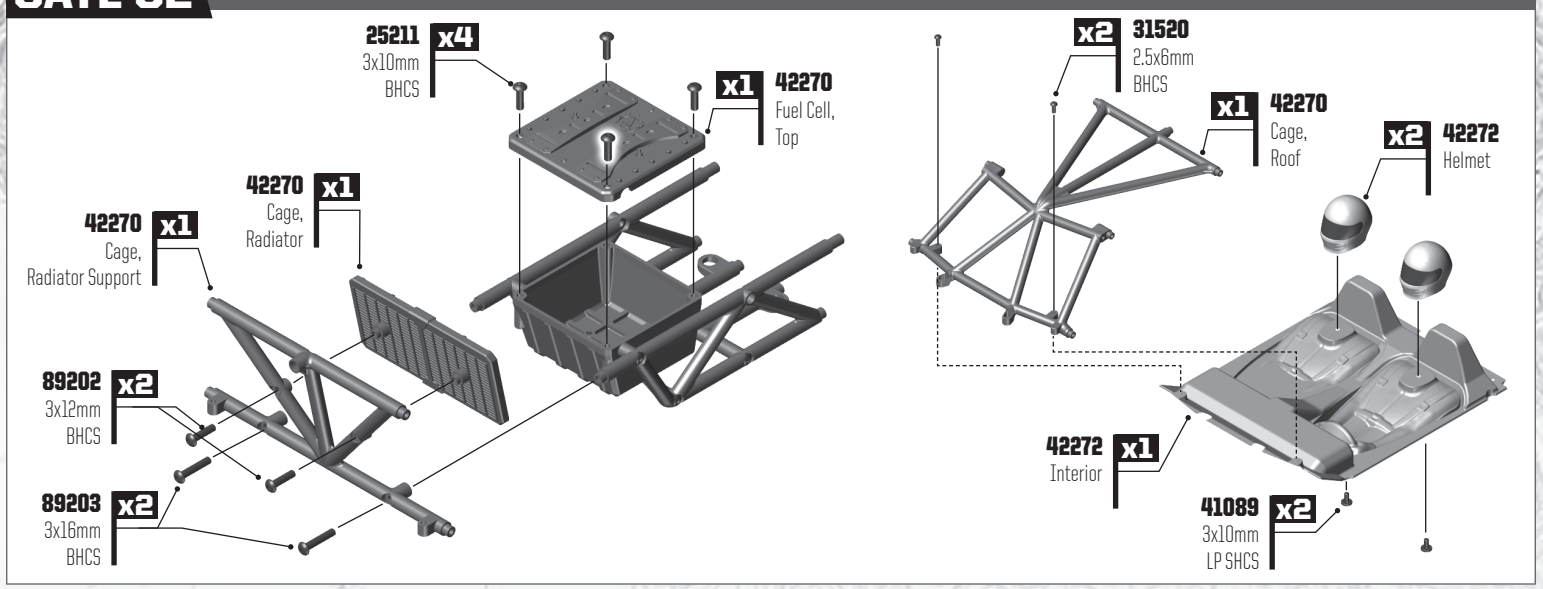

GATE 03 CAGE BUILD: BAG 10

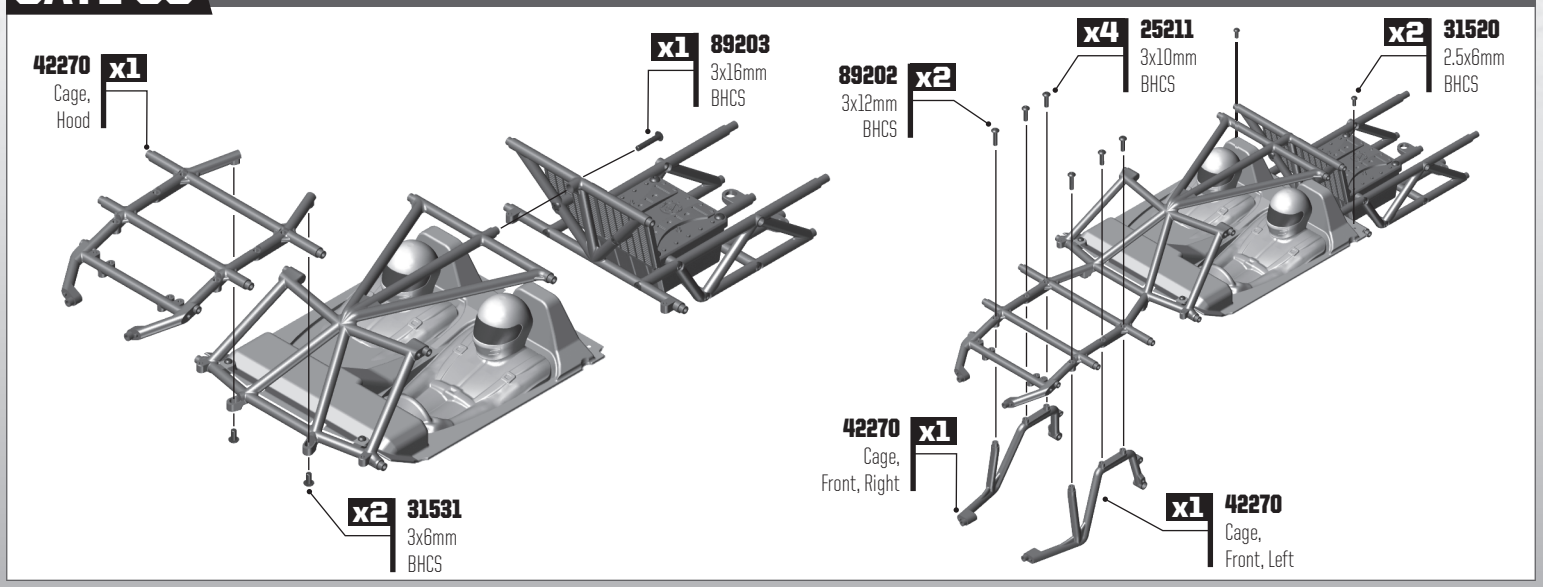

GATE 04 CAGE BUILD: BAG 10

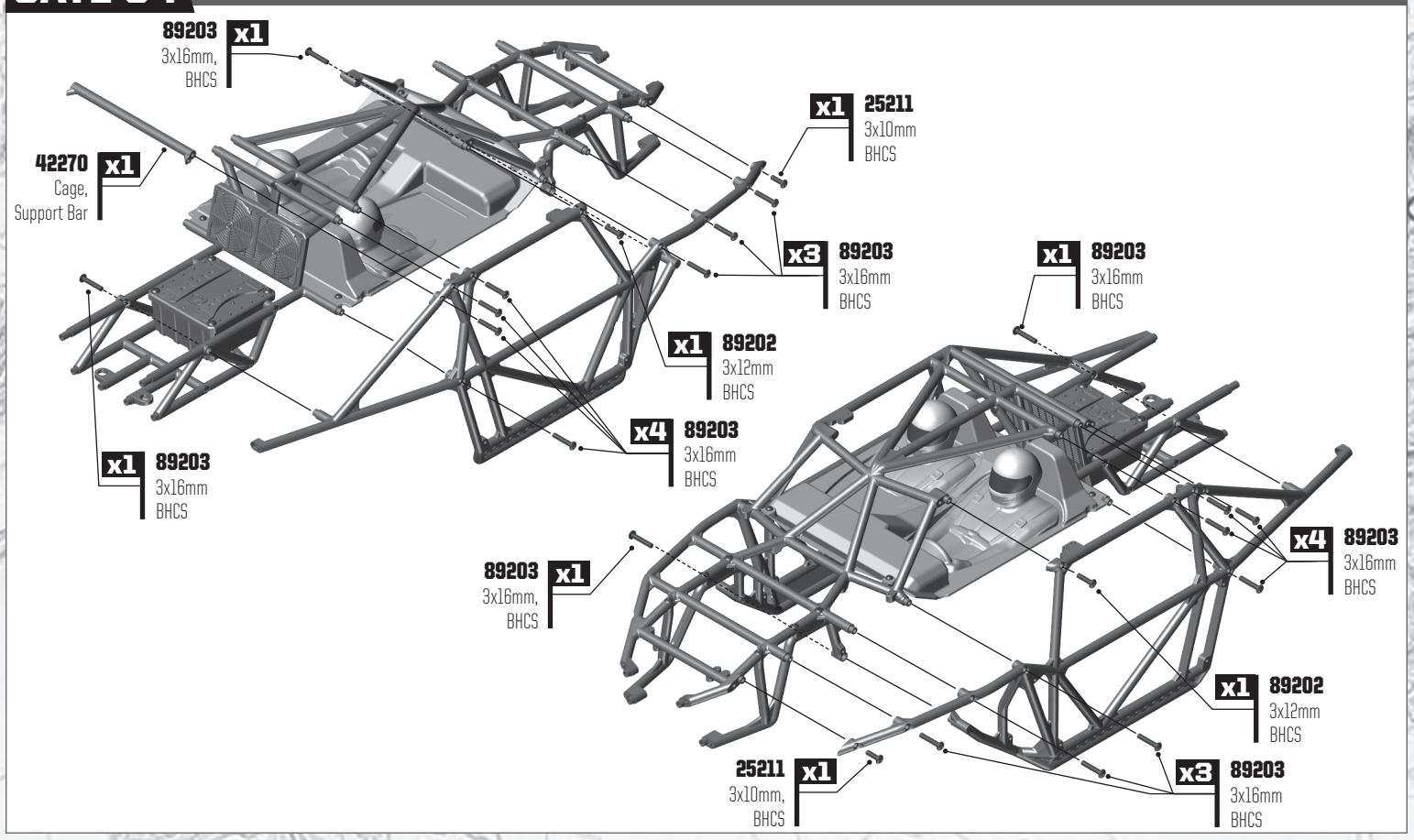

GATE 05 CAGE BUILD: BAG 10

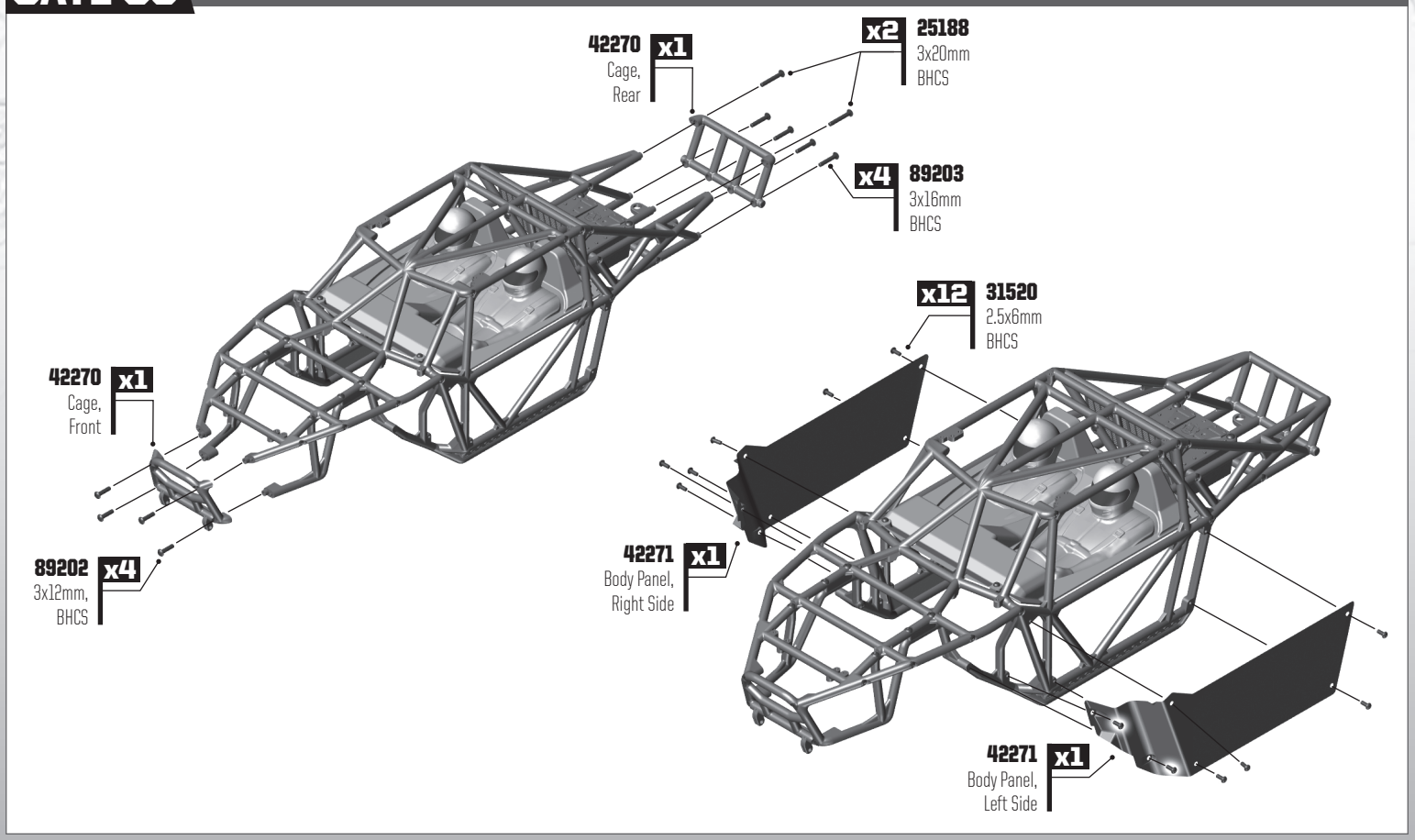

GATE 06 CAGE BUILD: BAG 10

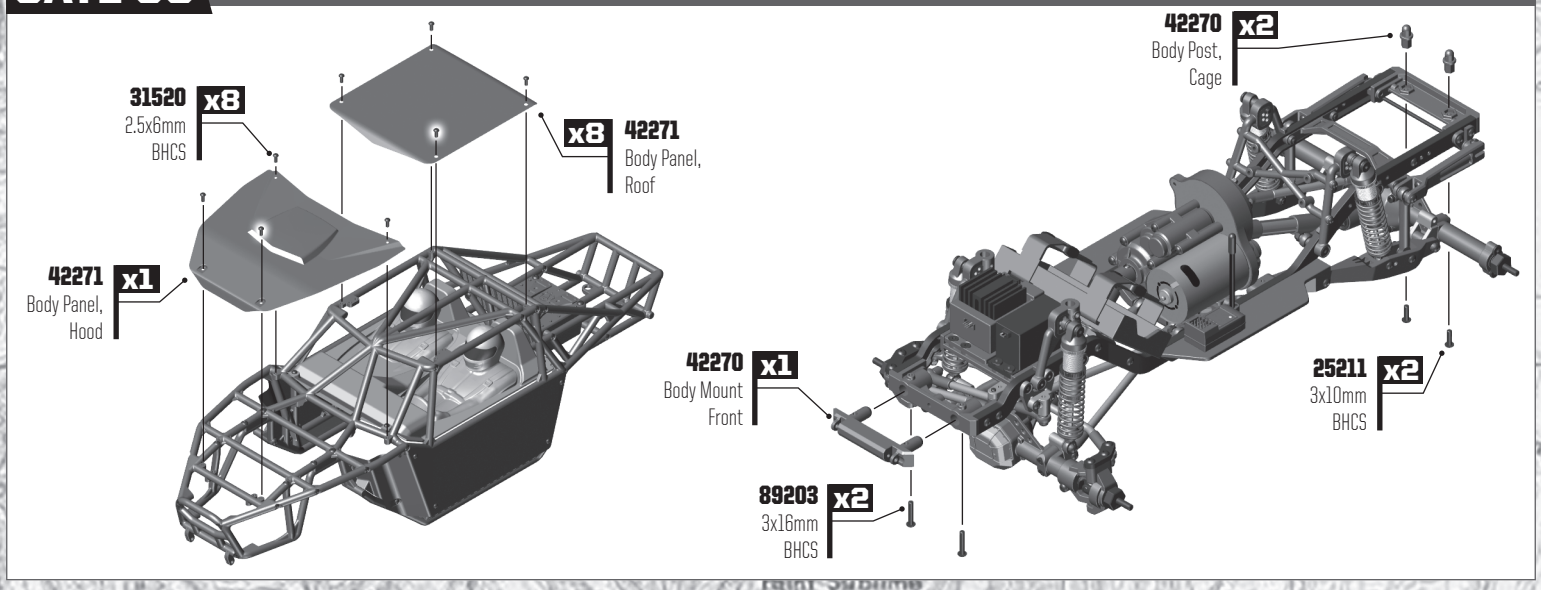

GATE 07 CAGE BUILD: BAG 10

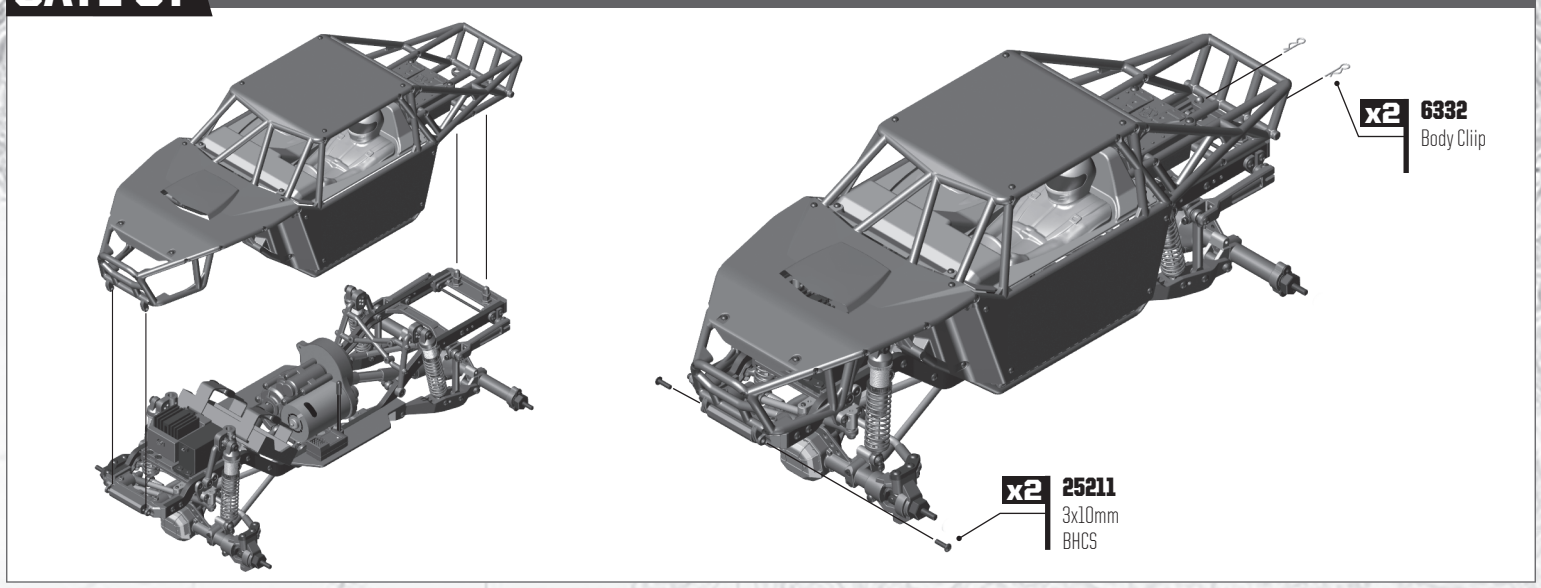

GATE 08 CAGE BUILD: BAG 10

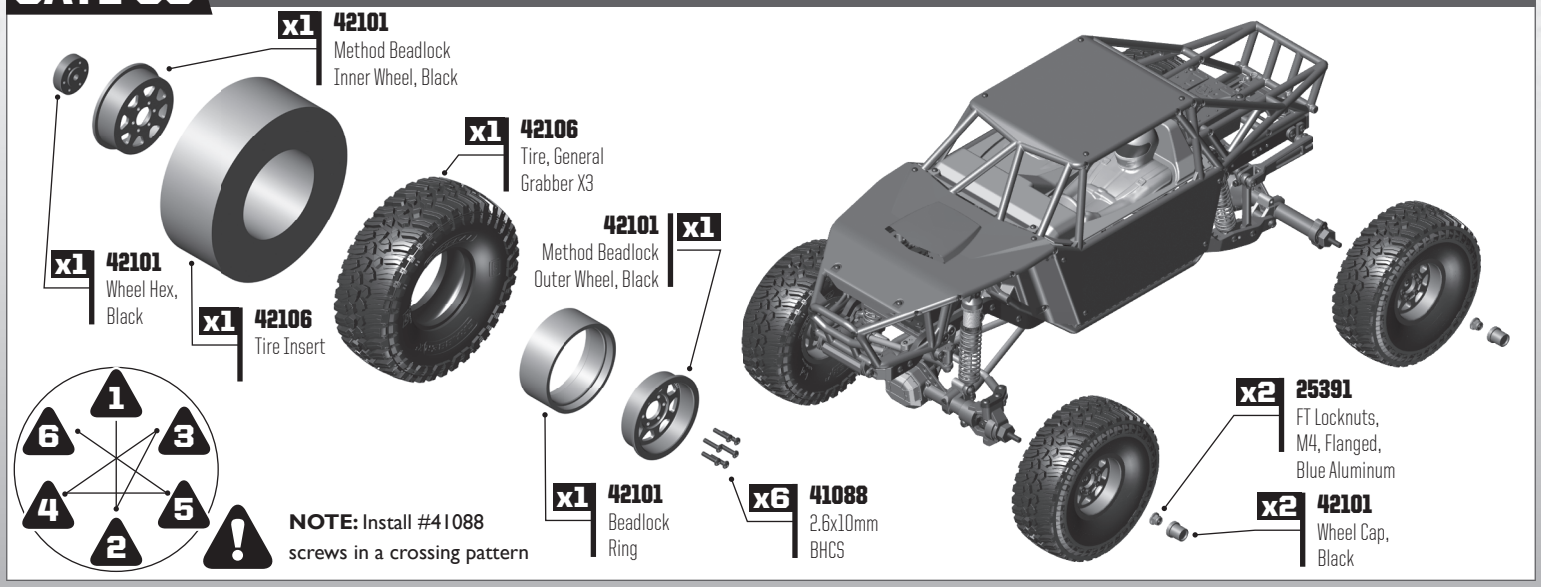

Shocks

5407	O-Rings, Red, Silicone	8
6299	E-Clipp, 1/8"	12
31392	3x5x0.3mm Washer	10
42040	Enduro Rod Ends	2
42041	Enduro Pivot Balls Set - KIT	1
42054	FT Enduro Pivot Ball, Steel	10
42055	FT Enduro, Shock Bushing, Steel	4
42056	FT Enduro Pivot Ball Set, Steel, Set (28)	1
42079	Enduro Shock Parts, Black Aluminum	2 ea.
42080	Enduro Shock Parts	4 ea.
42081	Enduro Shock Internals	1
42082	Enduro Shock Body, Silver, 10x32mm - KIT	2
42083	Enduro Shock Shaft, 3x30mm	2
42085	Enduro Shock Parts, Blue Aluminum	2 ea.
42086	FT Enduro Shock Body, Bronze, 10x32mm	2
42087	Shock Spring, Green 0.71 lb/in, 63mm Long	2
42088	Shock Spring, White, 0.95 lb/in, 63mm Long	2
42089	Shock Spring, Gray, 1.49 lb/in, 63mm Long - KIT	2
42090	Shock Spring, Blue, 2.09 lb/in, 63mm Long	2
42091	Shock Spring, Yellow, 2.47 lb/in, 63mm Long	2

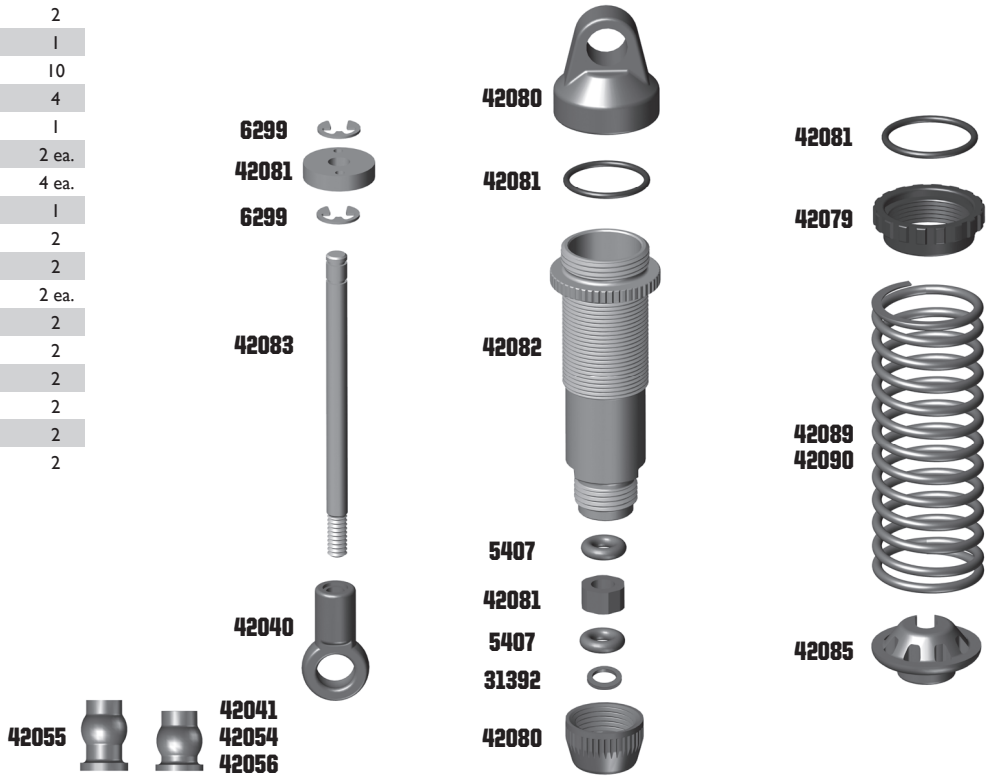

Tie Rods/Links

42040	Enduro Rod Ends	1
42041	Enduro Pivot Balls Set	1
42043	Enduro Front Links Set (Steering, 73mm, 83mm, 90mm, 100mm)	1
42044	Enduro Rear Links Set (96mm, 100mm, 108mm, 114mm)	1
42054	FT Enduro Pivot Balls, Steel	10
42055	FT Enduro Shock Bushings, Steel	4
42056	FT Enduro Pivot Balls, Steel, Set (28)	1

Wheelbase Chart

Wheelbase (in/mm)	Upper Length	Lower Length
11.8" / 299.7mm	3.78" / 96mm	3.93" / 100mm
12" / 304.8mm	3.93" / 100mm	4.05" / 108mm
12.3" / 312.4mm	4.25" / 108mm	4.45" / 114mm

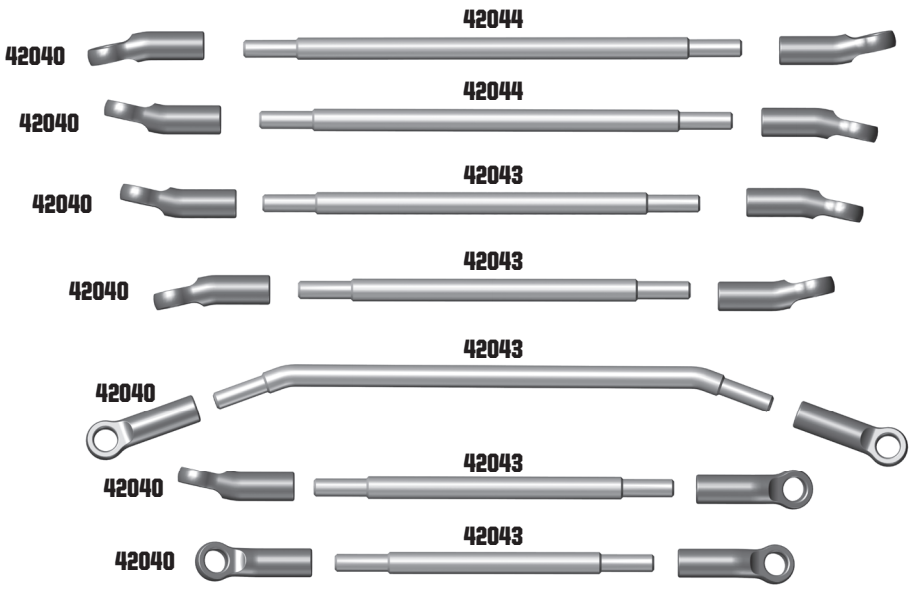

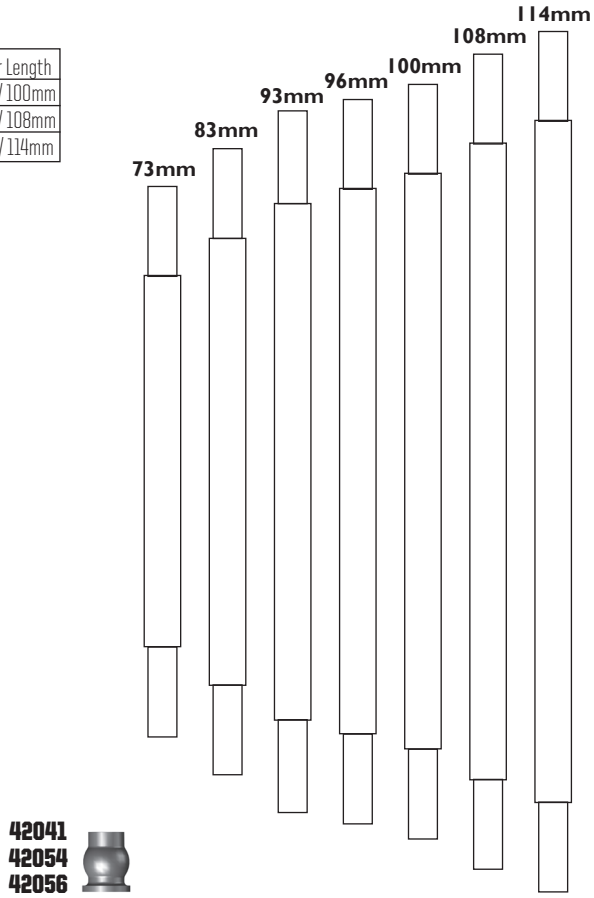

Motor Mount

1336	18T 48P Aluminum Pinion	1
9654	Spur Gear, 87T, 48P	1
25201	M3x8mm FHCS	10
25225	M3x3mm Set Screw	10
25391	FT M4 Locknuts, Blue	10
31530	M3x5mm BHCS	10
41090	M3x10mm LP SHCS	10
42023	Stealth X Gearbox	1
	(Case, Gear cover, Spur Gear Hubs)	
42029	Stealth X (Motor Plate)	1

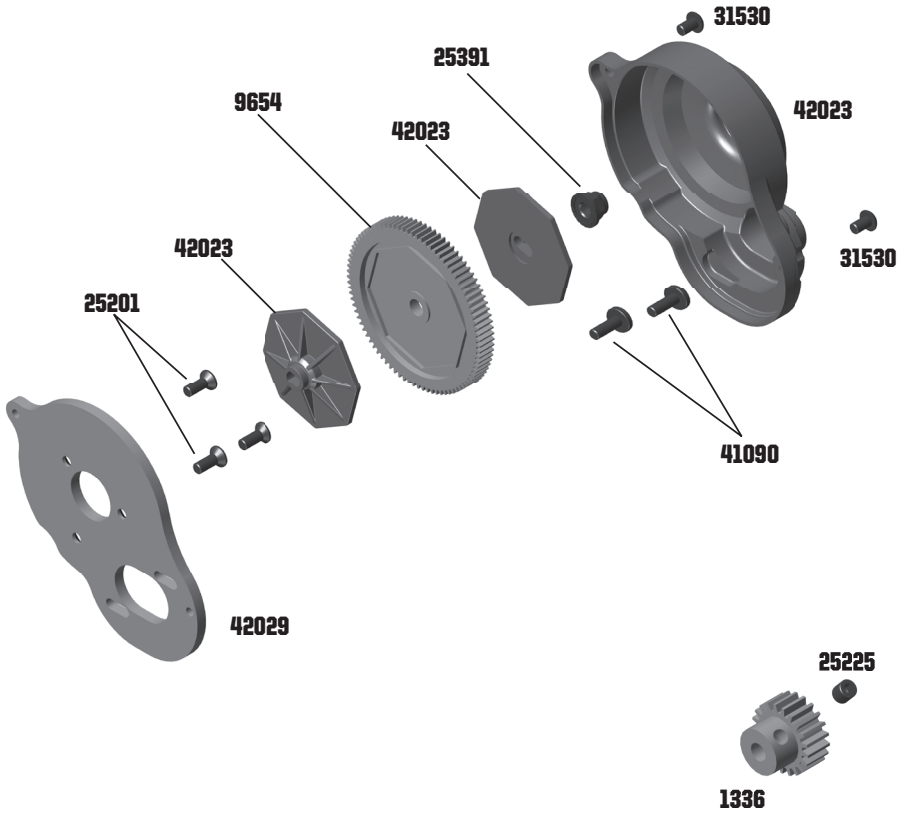

Transmission

31350	M2.5x10mm FHCS	10
41077	M2.5x14mm FHCS	10
41078	M3x28mm BHCS	10
42023	Stealth X Gearbox	1
	(Case, Spur Gear Hubs, Gear Cover)	
42025	Stealth X Idler Shaft, Idler Shim, Pins	1
42026	Stealth(R) X Idler Gear Set	1
42027	Stealth X Outdrives	1
42028	Stealth(R) X Drive Gear Set	1
42030	Stealth X Top Shaft (Stock Gearbox)	1
42031	FT Stealth X Idler Gear, Machined (26T, 27T, 28T)	1 ea.
42032	FT Stealth X Drive Gear Set, Machined	1
91560	FT Bearings, 5x10x4mm	4
91563	FT Bearings, 10x15x4mm	4

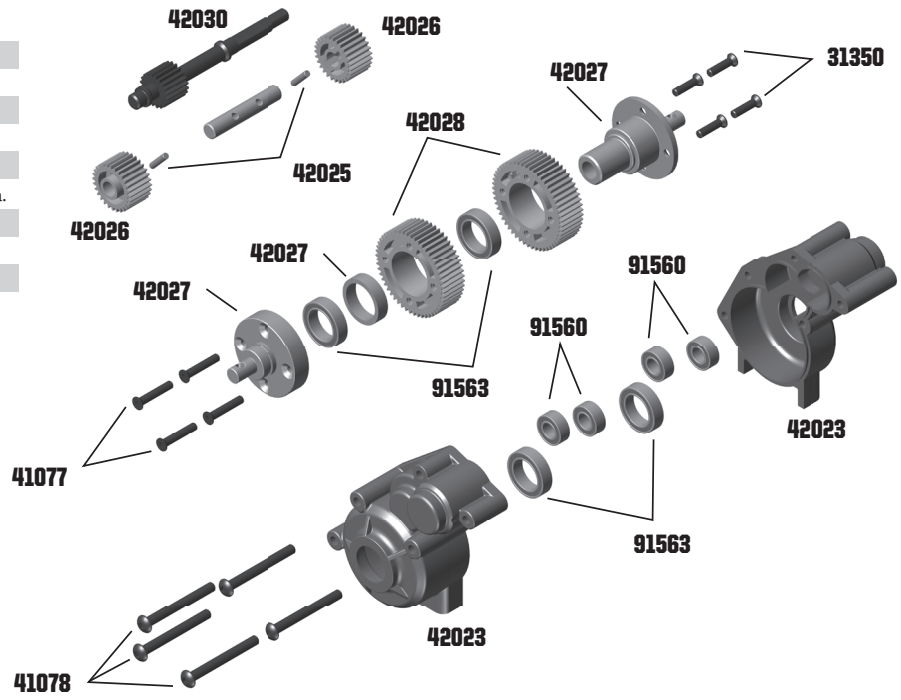

ARB

2308	M3x18mm BHCS	10
25187	M3x14mm BHCS	10
25189	M3x22mm BHCS	10
25215	M3 Locknut	10
42041	Enduro Pivot Balls Set	1
42054	FT Enduro Pivot Balls, Steel	10
42056	FT Enduro Pivot Balls, Steel, Set (28)	1
42250	Gatekeeper Traililng Arms	1
42252	Gatekeeper Anti-Roll Bar Set	1
42260	Gatekeeper Shims	4 ea.
89202	M3x12mm BHCS	10

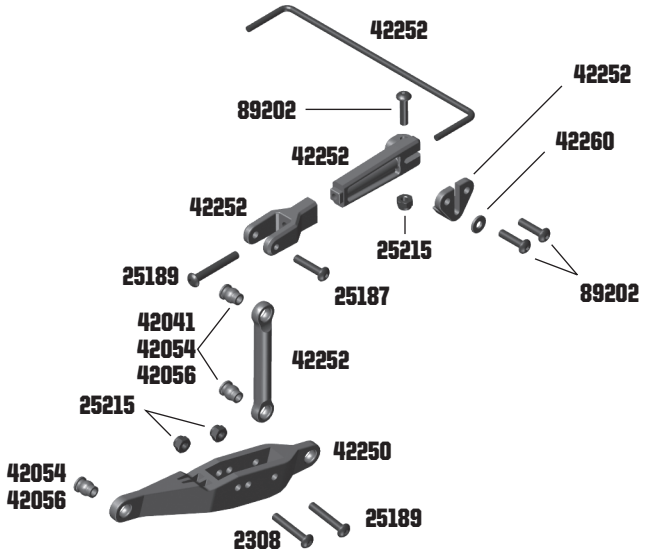

Battery Tray/Body Mounts

25188	M3x20mm BHCS	10
25211	M3x10mm BHCS	10
25215	M3 Locknut	10
41088	M2.6x10mm BHCS	10
41091	M3x20mm LP SHCS	10
42003	Battery Box, Short	1
42215	IFS Servo Horn	1
42254	Gatekeeper Shock Mounts	1 ea.
42256	Gatekeeper Shock Mount Inserts	2 ea.
42260	Gatekeeper Shims	4 ea.
42263	Gatekeeper Shock Mounts, Hard	1 ea.
71050	Hook and Loop Strap	2
89208	M3x14mm FHCS	10

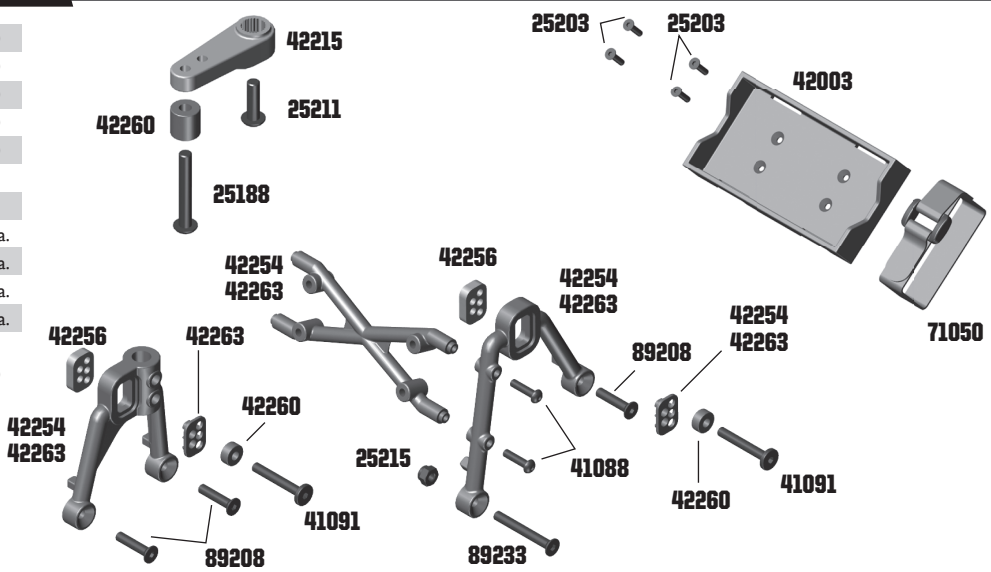

Drive Shafts

31532	M3x8mm BHCS	10
42020	Enduro Drive Shaft Parts, Molded	1
42021	Enduro Drive Shaft Parts, Machined	1
42022	Screw Pin, 4x12mm	6

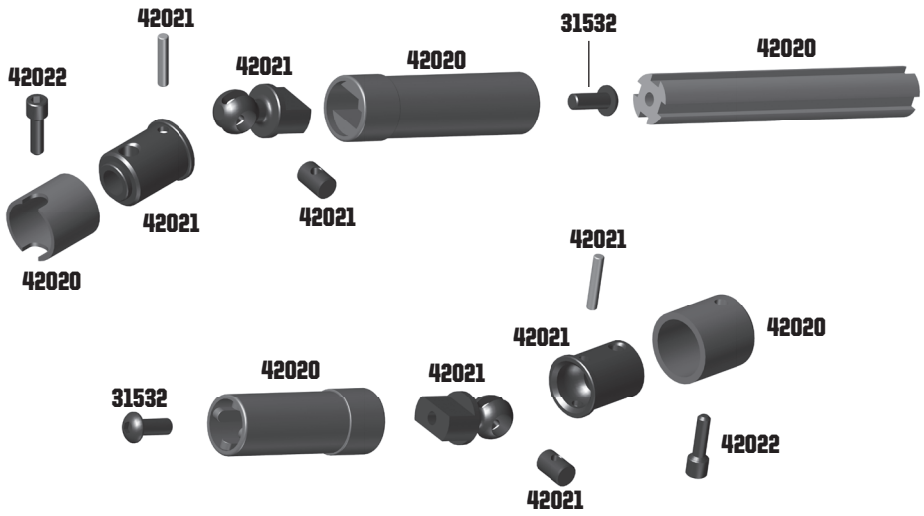

Front Axle

25187	M3x14mm BHCS	10
25211	M3x10mm BHCS	10
25215	M3 Locknut	10
25225	M3x3mm Set Screw	10
41078	M3x28mm BHCS	10
41086	M2.5x16mm SHCS	10
42019	Enduro 2x11mm Pin	10
42060	Enduro Diff Cover and Lower 4-Link Mounts	1
42061	Enduro Axle Housing (Front, Rear)	1 ea.
42062	Enduro Caster Blocks and Steering Blocks	1 ea.
42064	Enduro Steering Block Arms	1 ea.
42065	Enduro Ring Gear, 30T	1
42066	Enduro Pinion Gear, 8T	1
42067	Enduro Front Universal, Driveshaft, 80mm	2
42069	Enduro Wheel Hex, 6mm, Steel	4
42076	FT Enduro Wheel Hex, 6mm, Steel	4
42070	Enduro Shoulder Screw (M3x10mm)	6
71032	M2.5x14mm SHCS	10
91474	FT Bearings, 7x14x3.5mm	4
91560	FT Bearings, 5x10x4mm	4
91563	FT Bearings, 10x15x4mm	4

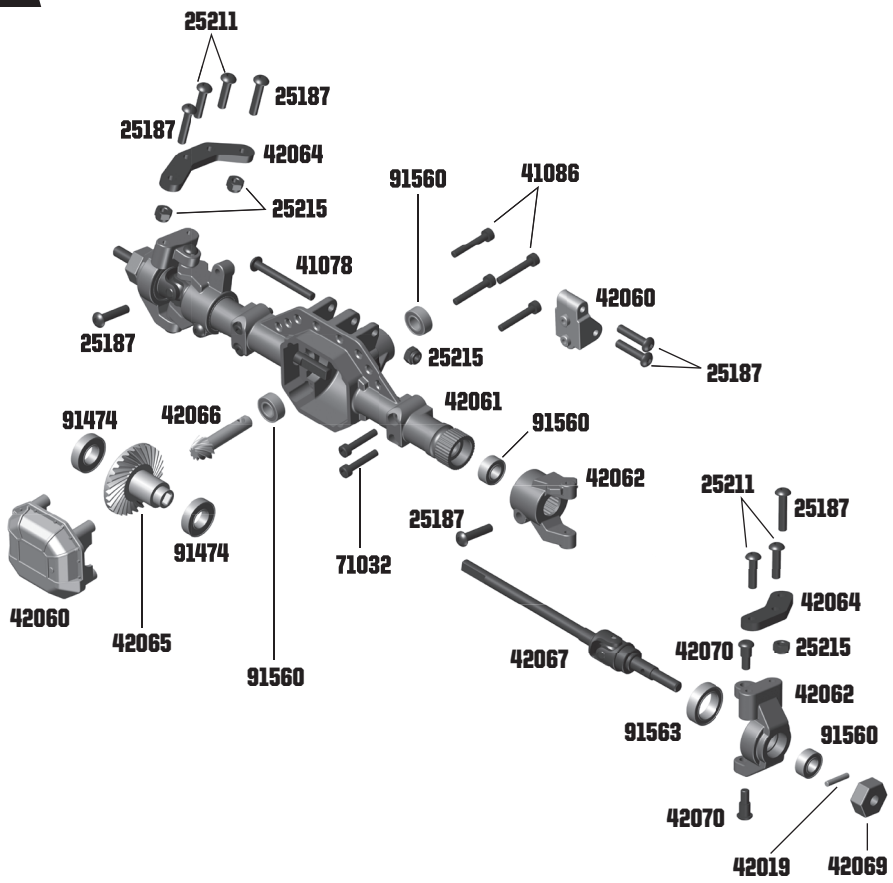

Rear Axle

25215	M3 Locknut	10
41078	M3x28mm BHCS	10
41086	M2.5x16mm SHCS	10
41089	M3x6mm LP SHCS	10
42019	Enduro 2x11mm Pin	10
42041	Enduro Pivot Balls Set	1
42054	FT Enduro Pivot Balls, Steel	10
42056	FT Enduro Pivot Balls, Steel, Set (28)	1
42060	Enduro Diff Cover and Lower 4-Link Mounts	1
42061	Enduro Axle Housing, (Front, Rear)	1 ea.
42065	Enduro Ring Gear, 30T	1
42066	Enduro Pinion Gear, 8T	1
42068	Enduro Rear Drive Shaft, 80mm	2
42069	Enduro Wheel Hex, 6mm, Steel	4
42071	Diff Cover and Lower 4-Link Mounts, Hard	1
42072	Enduro Axle Housing, Hard (Front, Rear)	1 ea.
42076	FT Enduro Wheel Hex, 6mm, Steel	4
42260	Gatekeeper Shims	4 ea.
71032	M2.5x14mm SHCS	10
91474	FT Bearings, 7x14x3.5mm	4
91560	FT Bearings, 5x10x4mm	4

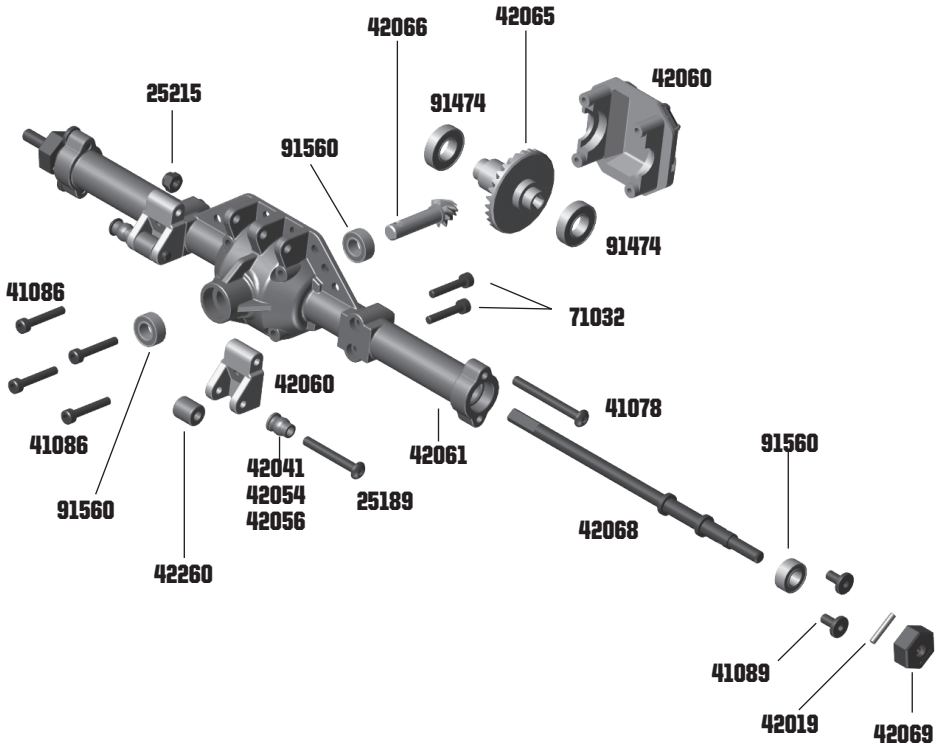

Roll Cage Front

25211	M3x10mm BHCS	10
31531	M3x6mm BHCS	10
42270	Gatekeeper Cage	1
89202	M3x12mm BHCS	10
89203	M3x16mm BHCS	10

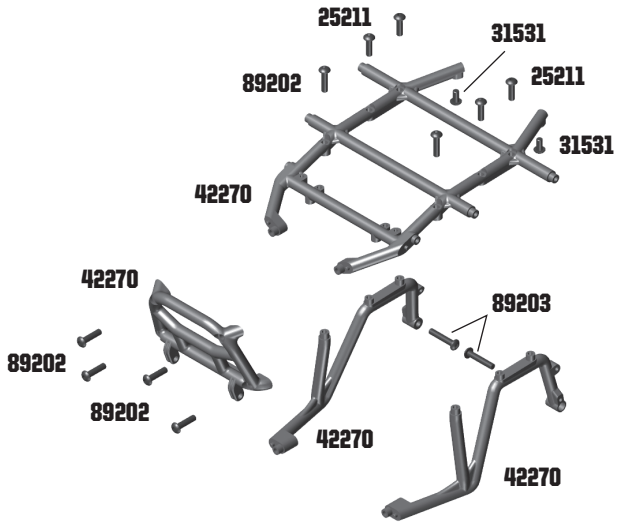

Roll Cage Top

42270	Gatekeeper Cage	1
89202	M3x12mm BHCS	10
89203	M3x16mm BHCS	10

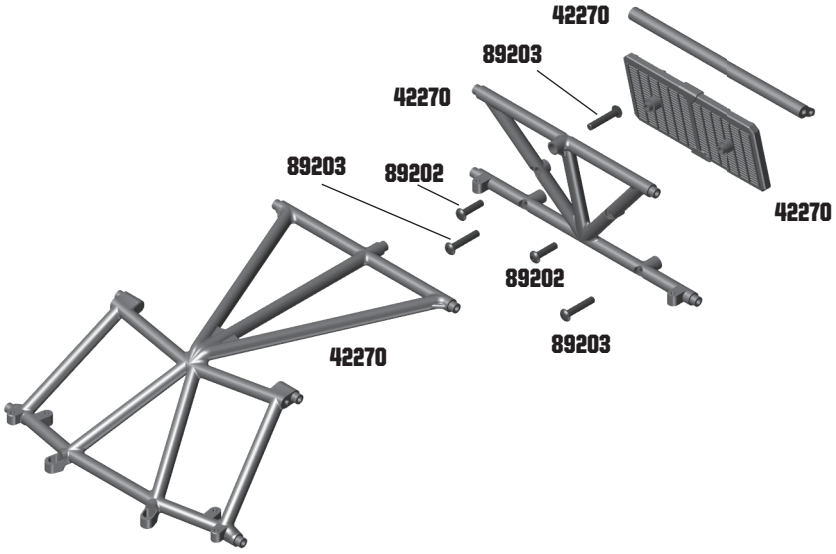

Roll Cage Rear

25211	M3x10mm BHCS	10
31531	M3x6mm BHCS	10
42270	Gatekeeper Cage	1
89203	M3x16mm BHCS	10

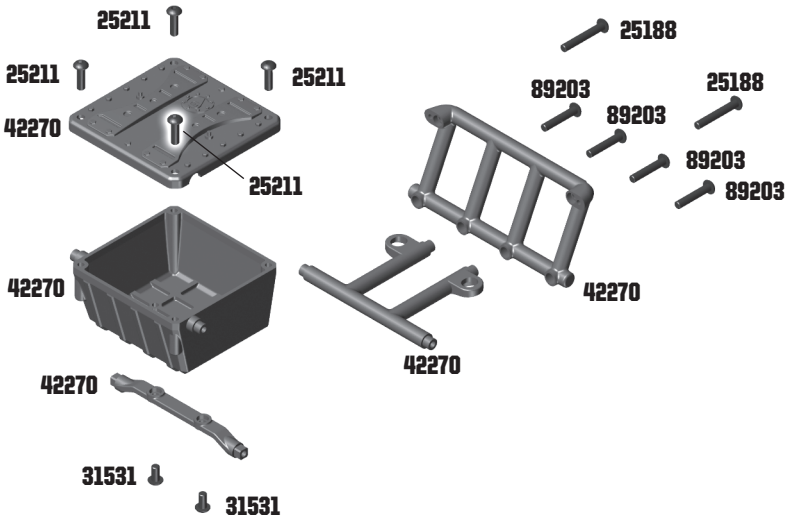

Roll Cage Sides

25211	M3x10mm BHCS	10
31531	M3x6mm BHCS	10
31532	M3x8mm BHCS	10
42270	Gatekeeper Cage	1
89202	M3x12mm BHCS	10
89203	M3x16mm BHCS	10

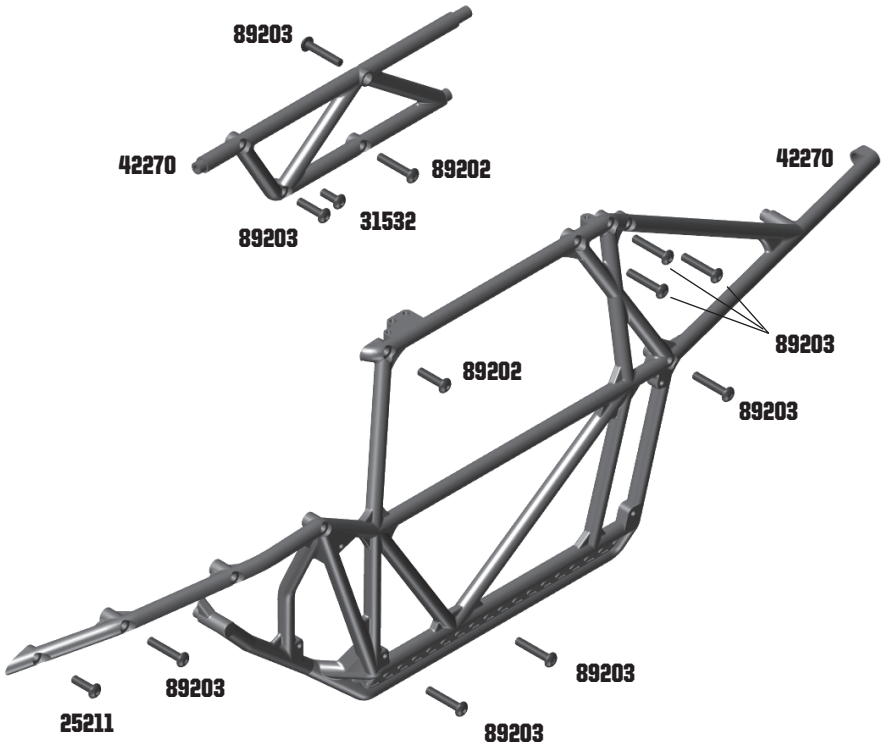

Body Panels

31520	M2.5x6mm BHCS	10
41089	M3x10mm LP SHCS	10
42271	Gatekeeper Body Panels	1
42272	Gatekeeper Interior	1

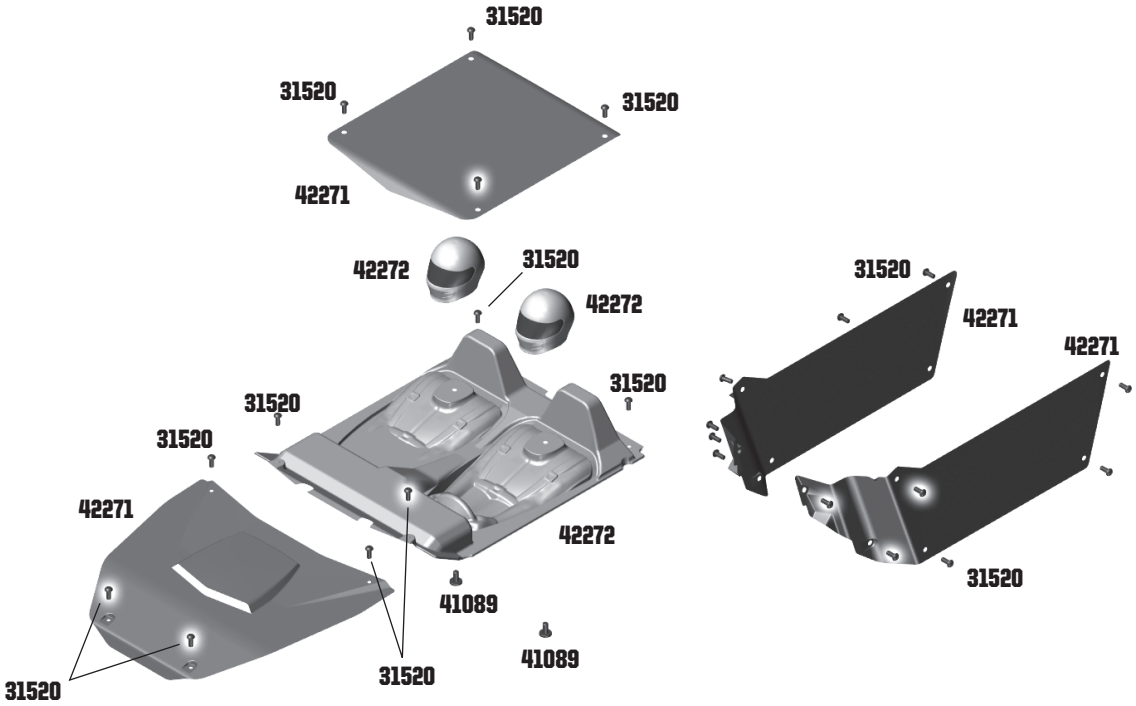

Wheel/Tire

25391	FT M4 Locknuts, Blue	10
41088	M2.6x10mm	10
42100	Enduro Method 701 Trail Series Wheel, 1.9" Bronze	4
42101	Enduro Method 701 Trail Series Wheel, 1.9" Black	4
42102	FT Enduro Beadlock Rings, Brass	4
42103	FT Enduro Beadlock Hex Adapter, Aluminum	4
42104	FT Enduro Beadlock Hex Adapter, Brass	4
42105	FT Tire Insert, 1.9"	2
42106	General Grabber X3 Tire w/Inserts, (1.9x4.65" DIA)	2
42107	General Grabber A/T X Tires w/Inserts, (1.55x3.85" DIA)	2
42108	Enduro The Ocho Wheels, 1.90", Silver	4
42109	Enduro The Ocho Wheels, 1.90", Black	4
42110	Enduro Trigon Wheels, 1.55", Silver	4
42111	Enduro Trigon Wheels, 1.55", Black	4

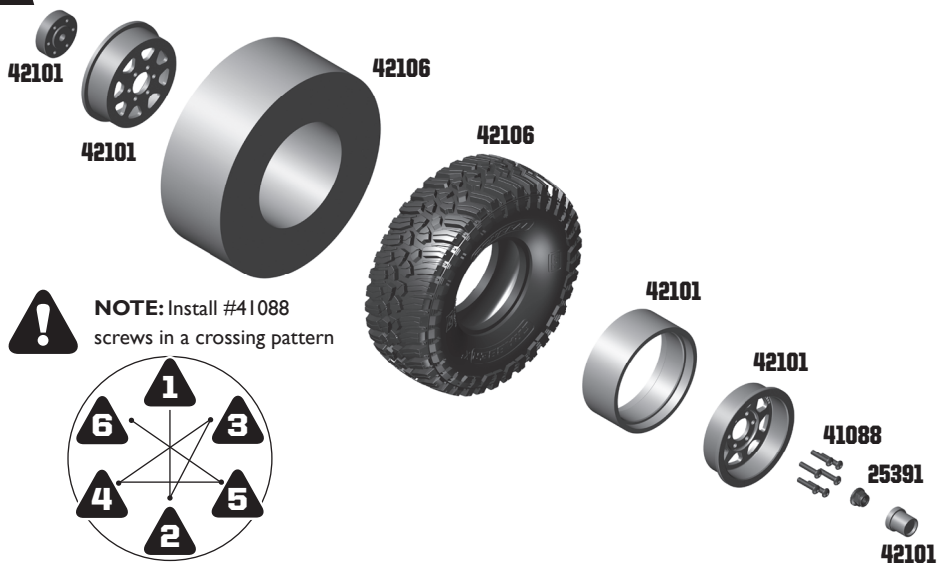

Chassis

4689	M3x16mm Set Screw	10
6338	Antenna Tube and Cap	1
25188	M3x20mm BHCS	10
25189	M3x22mm BHCS	10
25201	M3x8mm FHCS	10
25211	M3x10mm BHCS	10
25215	M3 Locknuts	10
25225	M3x3mm Set Screw	10
31531	M3x6mm BHCS	10
31532	M3x8mm BHCS	10
41090	M3x10mm LP SHCS	10
42002	Enduro Frame Mounting Plates	1 ea.
42004	Enduro Gearbox and Servo Mounts	1 ea.
42011	Frame Mounting Plates, hard	1 ea.
42012	Gearbox and Servo Mount, Hard	1 ea.
42251	Gatekeeper Floorboards	1 ea.
42252	Gatekeeper Anti-Roll Bar Set	1
42253	Gatekeeper Bumper Mounts	1 ea.
42254	GateKeeper Pan Hard Mount	1
42255	Gatekeeper Bumper Mounts	1 ea.
42257	Gatekeeper Chassis Rails	1
42260	Gatekeeper Shims	4 ea.
42262	Gatekeeper Bumper Mounts, Hard	1 ea.
42270	Gatekeeper Cage	1
89203	M3x16mm BHCS	10
89208	M3x14mm FHCS	10
91477	M3 Nut	10

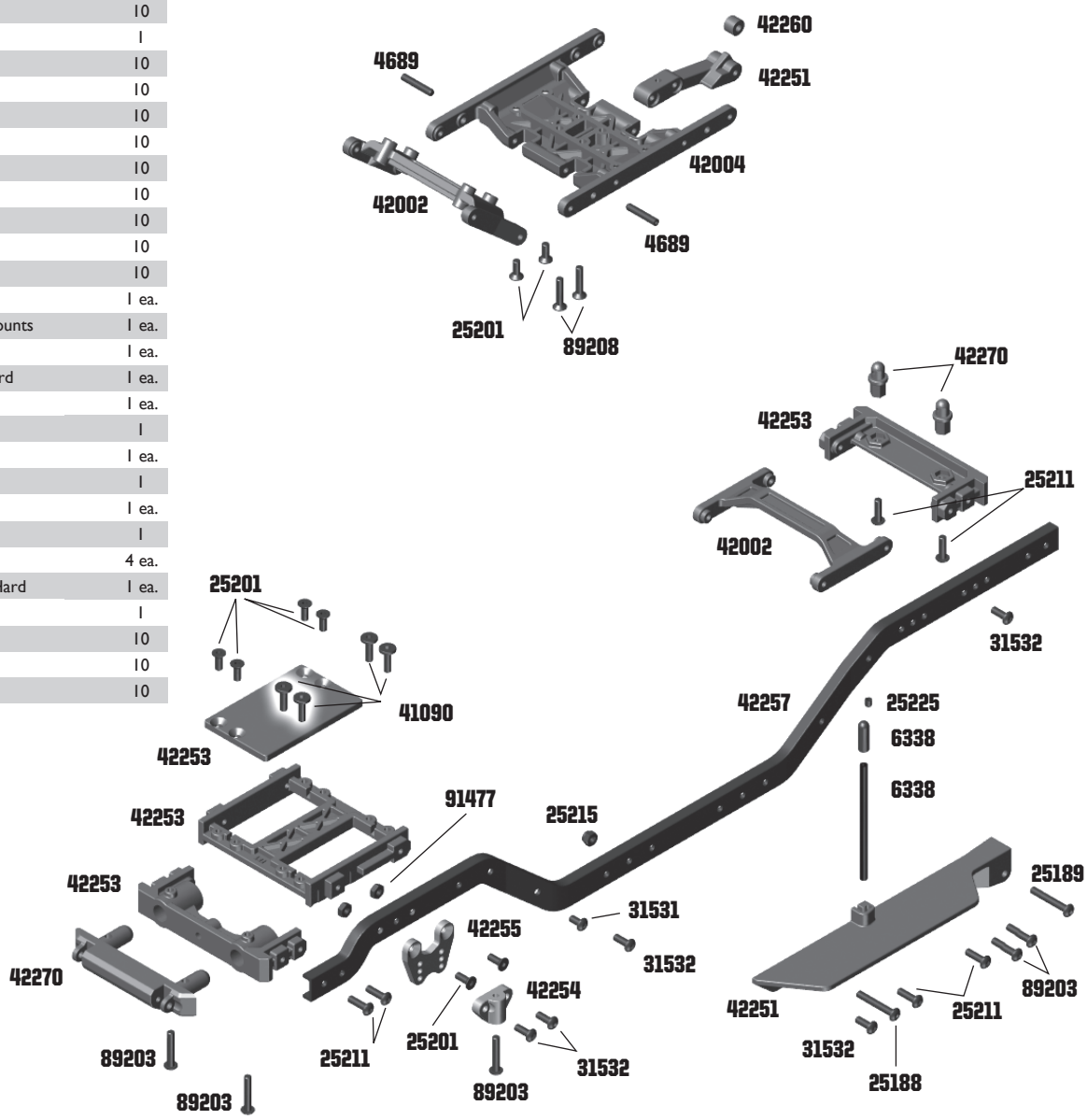

SHOCK FLUIDS

5420	10 Weight Silicone Shock Fluid	2oz.
5421	20 Weight Silicone Shock Fluid	2oz.
5422	30 Weight Silicone Shock Fluid	2oz.
5423	40 Weight Silicone Shock Fluid	2oz.
5424	22.5 Weight Silicone Shock Fluid	2oz.
5425	80 Weight Silicone Shock Fluid	2oz.
5426	27.5 Weight Silicone Shock Fluid	2oz.
5427	15 Weight Silicone Shock Fluid	2oz.
5428	25 Weight Silicone Shock Fluid	2oz.
5429	35 Weight Silicone Shock Fluid	2oz.
5430	45 Weight Silicone Shock Fluid	2oz.
5431	55 Weight Silicone Shock Fluid	2oz.
5432	32.5 Weight Silicone Shock Fluid	2oz.
5433	37.5 Weight Silicone Shock Fluid	2oz.
5434	42.5 Weight Silicone Shock Fluid	2oz.
5435	50 Weight Silicone Shock Fluid	2oz.
5436	60 Weight Silicone Shock Fluid	2oz.
5437	70 Weight Silicone Shock Fluid	2oz.
5438	47.5 Weight Silicone Shock Fluid	2oz.

LUBES & ADHESIVES

1105	FT Green Slime Shock Lube	1
1596	FT Locking Adhesive	1
1597	FT Tire Adhesive, medium	1
6588	Black Grease - 4cc	1
6591	S.Diff Lube - 4cc	1
6636	Silicone Grease - 4cc	1
6727	Servo Tape	2

PINIONS / SPUR GEARS

1335	17T 48P Aluminum Pinion Gear	1
1336	18T 48P Aluminum Pinion Gear	1
1337	19T 48P Aluminum Pinion Gear	1
1338	20T 48P Aluminum Pinion Gear	1
1339	21T 48P Aluminum Pinion Gear	1
1340	22T 48P Aluminum Pinion Gear	1
1341	23T 48P Aluminum Pinion Gear	1
1342	24T 48P Aluminum Pinion Gear	1
1343	25T 48P Aluminum Pinion Gear	1
1344	26T 48P Aluminum Pinion Gear	1
1345	27T 48P Aluminum Pinion Gear	1
9652	78T 48P Spur Gear	1
9653	84T 48P Spur Gear	1
9654	87T 48P Spur Gear (Kit)	1

BODIES & DECALS

5407	O-Rings, Red, Silicone	8
6332	Body Clips	10
7187	M2x8mm SHCS	10
21173	Body Clips, Small	10
25203	M3x12mm FHCS	10
31509	M2x3mm BHCS	10
31531	M3x6mm BHCS	10
41079	M2.5x6mm SHCS	10
42120	Sendero Body Set, Clear (with Black Body Accessories)	1
42121	Sendero Body, Clear (Cab, Bed, Window Masks)	1
42122	Sendero Body Decal Sheet	1
42123	Sendero Body Accessories, Black	1
42124	Sendero Body Accessories, Chrome	1
42125	Sendero Body Accessories, Satin Chrome	1
42126	Sendero Bumpers (Front, Rear, and Fairlead), Black	1
42127	FT Sendero Fairlead, Aluminum	1
42128	FT Sendero Fairlead, Gunmetal Aluminum	1
42129	FT Sendero Fairlead, Green Aluminum	1
42130	FT Sendero Fairlead, Blue Aluminum	1
42132	Sendero Inner Fenders	1
42133	Element Decal Sheet	1

OPTION PARTS

42010	Enduro Bumper Mounts, Hard	1
42013	Enduro Shock Mount Set, Hard	1
42014	Enduro Floor Board, Receiver Box, Hard	1
42015	Enduro Rock Slider, Hard	1
42024	Stealth X Gearbox Top Shaft, Inverse Gearbox	1
42031	FT Stealth X Gearbox Idler Gear Set, Machined	1
42032	FT Stealth X Gearbox Drive Gear Set, Machined	1
42033	FT Stealth X Spur Gear Hub, Aluminum	2
42034	Stealth X Gearbox, Complete	1
42054	FT Pivot Ball, Steel (6mm)	10
42055	FT Pivot Ball, Shock Bushing, Steel	4
42058	FT Enduro Ring Gear Spool	1
42059	FT Enduro Ring Gear, Machined 30T	1
42071	Enduro Diff Cover and Lower 4-Link Mounts, Hard	1
42072	Enduro Axle Housing (Front, Rear), Hard	1 ea
42073	Enduro Caster and Steering Blocks, Hard	1
42076	FT Enduro Wheel Hex, 6mm (w/Set Screw) Steel	4
42077	Enduro Axle Kit, Complete (Builds either 1 front or 1 rear axle)	1
42078	FT Enduro Shock Set, 10x90mm	1
42103	FT Enduro Beadlock Hex Adapters, Aluminum	4
42104	FT Enduro Beadlock Hex Adapters, Brass	4

XP / AE ELECTRONICS

29204	AE XP-R4 2.4GHz 4CH Receiver	1
29257	AE XP130 2.4GHz 3CH Radio System	1
29262	ESS-One+ 2017 Engine Sound System	1
29263	ESS-Dual+ Engine Sound System	1
29264	ESS-Air Engine Sound System	1
29265	XP Police Light Bar, 1:10 Scale	1
29266	XP LED RC Light Kit (12 LED's)	1
29267	XP LED Roof Light Kit (4 LED's)	1
29268	XP LED Roof Light Kit (6 LED's)	1
29272	XP 5 LED Aluminum Light Bar, 88mm	1
29273	XP 7 LED ALuminum Light Bar, 120mm	1
29274	XP 10 LED Aluminum Light Bar, 170mm	1
29275	XP LED Light Bar Hardware	1
29277	XP Head and Tail Light Kit	1
29279	XP LED Rock Light Set, 150mm	1
29290	XP DSV System	1

REEDY ELECTRONICS

MOTORS

27424	Reedy Radon2 Crawler 16T 5-Slot 1850kV Brushed Motor	1
27430	Reedy Crawler 540 16T 5-Slot RTR Brushed Motor	1
27431	Reedy Radon2 Crawler 12T 5-Slot 2700kV Brushed Motor	1
27432	Reedy Radon2 Crawler 20T 5-Slot 1500kV Brushed Motor	1
27433	Reedy Radon 2 Brush/Spring Set	1
27434	Reedy Radon 2 Wire Set	1
27461	Reedy Crawler 550 14T 5-Slot RTR Brushed Motor	1

COMPETITION ESC's (SPEED CONTROLLERS)

27011	Reedy SC480X Brushed Crawler ESC	1
27034	Reedy SC480X Program Card	1

SPORT ESC's (SPEED CONTROLLERS)

29198	Reedy SC400 Brushed ESC w/Crawler Mode	1
29199	Reedy SC400X Brushed Crawler ESC	1

SERVOS & SERVO ACCESSORIES

27116	RC2312 Digital HV Competition Crawler Servo	1
27122	Reedy Aluminum Servo Horn (25)	1
27123	Reedy Aluminum Clamping Servo Horn (25)	1
27140	RC2312 Gear Set	1
27141	RC2312 Case Set	1
27150	1320MG Digital RTR Servo	1
27151	RC4020A Gear Set	1

REEDY ACCESSORIES

643	Low Profile Bullet Plug 4mm x 14mm (2)	1
644	Low Profile Bullet Plug 4mm x 14mm (10)	1
645	Low Profile Bullet Plug 5mm x 14mm (2)	1
646	Low Profile Bullet Plug 5mm x 14mm (10)	1
647	Silicone Wire 12AWG-Black (1m)	1
648	Silicone Wire 14AWG-Black (1m)	1
650	Shrink Tubing - 15pcs 4.5mm x 20mm	1
747	Silicone Wire 12AWG-Black (30m)	1
790	Silicone Wire 13AWG-Black (1m)	1
791	Silicone Wire 13AWG-Black (30m)	1
792	Low Profile Caged Bullet Plug 4mm x 14mm (2)	1
794	Low Profile Caged Bullet Plug 5mm x 14mm (2)	1
27304	LiPo Battery Weight Set - Shorty	1
27355	Shorty Battery Weight Set - 20g, 34g, 50g	1

REEDY BATTERIES / CHARGERS

BATTERIES

302	AA Alkaline 1.5V (4)	1
758	Wolfpack LiPo 3000mAh 30C 7.4V w/T-Plug	1
759	Wolfpack LiPo 3000mAh 30C 11.1V w/T-Plug	1
27313	LiPo Pro TX/RX 2400mAh 7.4V Flat	1
27315	LiFe Pro TX/RX 1600mAh 6.6V Flat	1
27318	Wolfpack HV LiPo 50C 4200mAh 7.6V Shorty	1
27347	Zappers SG3 6100mAh 85C 7.6V Shorty	1
27348	Zappers SG3 4800mAh 115C 7.6V Shorty	1

CHARGERS

27201	324-S AC LiPo/LiFe Compact Balance Charger	1
27202	123-S AC LiPo Compact Balance Charger	1
27203	1416-C2L Dual AC/DC Competition Battery Charger	1

CHARGER ACCESSORIES

27220	Reedy 7-in-1 Universal Charge Lead (4mm)	1
27221	Reedy T-plug Charge Lead (4mm)	1
27222	Reedy XH 2-6S Balance Board (4mm)	1
27223	Reedy RX Charger Lead FUT (4mm)	1
27224	Reedy US to IEC 320 C5 angle 1M AC Power Cord	1
27226	Reedy EU to IEC 320 C5 angle 1M AC Power Cord	1
27235	Reedy 2S RX/TX Pro Charge Lead	1
27236	Reedy 2S-4S T-plug Pro Charge Lead	1
27237	Reedy 2S-4S XT60 Pro Charge Lead	1

APPAREL / PROMOTIONAL

TEE SHIRTS

SP124*	AE 2017 Worlds Tee, Black (S, M, L, XL-5XL)	1
SP126*	Team Associated Tri T-Shirt, Black (S, M, L, XL-5XL)	1
SP140*	Reedy Heritage Tee, Black (S, M, L, XL-5XL)	1
SP200*	Element RC Logo Tee, Gray (S, M, L, XL-5XL)	1
SP201*	Element RC Rhombus Tee, Black (S, M, L, XL-5XL)	1
97000	Reedy S20 T-Shirt S	1
97001	Reedy S20 T-Shirt M	1
97002	Reedy S20 T-Shirt L	1
97003	Reedy S20 T-Shirt XL	1
97004	Reedy S20 T-Shirt XXL	1
97005	Reedy S20 T-Shirt XXXL	1

HOODIES/JACKETS

SP142*	Reedy W19 Hoodie - Black (S, M, L, XL-3XL)	1
SP230	Element RC Zip Up, Black (S, M, L, XL-5XL)	1
SP231	Element RC Hoodie, Black (S, M, L, XL-5XL)	1
SP250	Element RC Jacket, Black (S, M, L, XL-2XL)	1

HATS

SP20	AE Patch Trucker Hat	1
SP430	Reedy Trucker Hat 2018	1
SP260	Element RC Hat, Curved Bill, Black	1
SP261	Element RC Hat, Flat Bill, Black	1
SP262	Element RC Beanie, Black	1

BANNERS/MATS CARRIERS

SP29	Team Associated Countertop/Setup Mat	1
SP30	Team Associated Pit Mat	1
SP31	Reedy Countertop/Setup Mat	1
SP115	Reedy Circuit Cloth Banner	1
SP116	Reedy Power Vinyl Banner, 48x24	1
SP117	Reedy Power Cloth Banner, 96x24	1
SP118	Reedy Power Cloth Banner, 48x24	1
SP280	Element RC Counter Top Mat	1
SP281	Element RC Pit Mat	1
SP282	Element RC Pit Towel	1
SP425	FT Fluid Carrier	1
SP426	Team Associated Countertop / Setup Mat	1
SP439	Reedy Countertop / Setup Mat	1
110684	Team Associated Track Banner	1
110685	Team Associated Cloth Banner	1

*** Use part number plus the desired size when ordering!**

TOOLS

1111	FT Turnbuckle Wrench	1
1112	FT 4mm Turnbuckle Wrench	1
1114	FT Dual Turnbuckle Wrench	1
1449	Off Road Ride Height Gauge	1
1452	FT TC Ride Height Gauge	1
1498	FT Universal Tire Balancer	1
1499	FT Body Reamer	1
1500	FT 1.5mm Hex Driver	1
1501	FT 2.0mm Hex Driver	1
1502	FT 2.0mm Ball Hex Driver	1
1503	FT 2.5mm Hex Driver	1
1504	FT 2.5mm Ball Hex Driver	1
1505	FT 3.0mm Hex Driver	1
1506	FT 5.0mm Hex Driver	1
1507	FT 5.5mm Nut Driver	1
1508	FT 7.0mm Nut Driver	1
1510	FT 1.5mm Hex Replacement Tip	1
1511	FT 2.0mm Hex Replacement Tip	1
1512	FT 2.0mm Ball Replacement Tip	1
1513	FT 2.5mm Hex Replacement Tip	1
1514	FT 2.5mm Ball Replacement Tip	1
1515	FT 3.0mm Hex Replacement Tip	1
1518	FT HEX Driver Tool Set (3pcs)	1
1519	FT Hex/Nut Driver Tool Set (5pc)	1
1522	FT Digital Scale, 100/0.01g	1
1555	FT Clutch Gauge, 4 Shoe	1
1568	FT 5.5mm Short Nut Driver	1
1569	FT 7mm Nut Driver, T-Handle	1
1570	FT 5.5mm Short Nut Driver	1
1571	FT 1:8 Wheel Nut Wrench, 17mm Hex	1
1579	FT Ball Cup Wrench - (will not work on Enduro rod ends)	1
1595	Chassis Weights, 1/4 oz	1
1650	7 Piece Hex Driver Set	1
1657	FT 1/4" Hex Drive .050" Tip	1
1658	FT 1/4" Hex Drive 1/16" Tip	1
1659	FT 1/4" Hex Drive 5/64" - 2.0mm Tip	1
1660	FT 1/4" Hex Drive 3/32" Tip	1
1661	FT 1/4" Hex Drive 1.5mm Tip	1
1662	FT 1/4" Hex Drive 2.5mm Tip	1
1666	FT 1/4" Hex Drive 5.5mm Nut Driver Tip	1
1667	FT 1/4" Hex Drive 7.0mm Nut Driver Tip	1
1668	FT 1/4" Hex Drive 8.0mm Nut Driver Tip	1
1673	FT 1/4" Hex Drive 2.5mm Ball End Tip	1
1674	FT 1/4" 5 Piece Power Tool Tips Set (5/64-2.0mm, 1.5mm, 2.5mm, 5/64"- 2.0mm ball, 2.5mm ball)	1
1675	FT Shock Shaft Pliers	1
1679	FT T-Handle Ratchet Driver	1
1719	FT Camber + Track Width Tool	1
1737	FT Body Scissors	1
3718	12 Inch Nylon Wire Ties	12
3720	8 Inch Nylon Wire Ties	12
3987	FT Droop Gauge	1
7709	4 Inch Nylon Wire Ties	12
89240	RC8 FT Turnbuckle Wrench	1

GATE 01 STEALTH X: BUILD CONFIGURATION: MOTOR MOUNT FACING REAR (STOCK)

OVERDRIVE:
Overdrive is a scenario where the front and rear wheels do not rotate at the same speed. The Stealth X gearbox is designed to allow the front wheels to spin faster than the rear wheels. Overdrive is advantageouse when climbing up rock faces because the front tires will want to pull the vehicle up the rock. On descents, the rear tires rotating slower than the front tires will help keep the chassis more stable and keep the rear tires planted on the ground.

Stealth X:
The Stealth X gearbox allows the driver to change the front-to-rear drive ratios with 3 separate ratio adjustments to the rear drive shaft. The driver has the option to flip the gearbox direction (motor mount facing the front). The optional inverse top shaft (#42024) is required.

Please Note:
The 20T top shaft, 28T idler gear, and 52T drive gear will always be meshed together in all 6 gearbox configurations.

GATE 02 STEALTH X: BUILD CONFIGURATION: MOTOR MOUNT FACING REAR (STOCK)

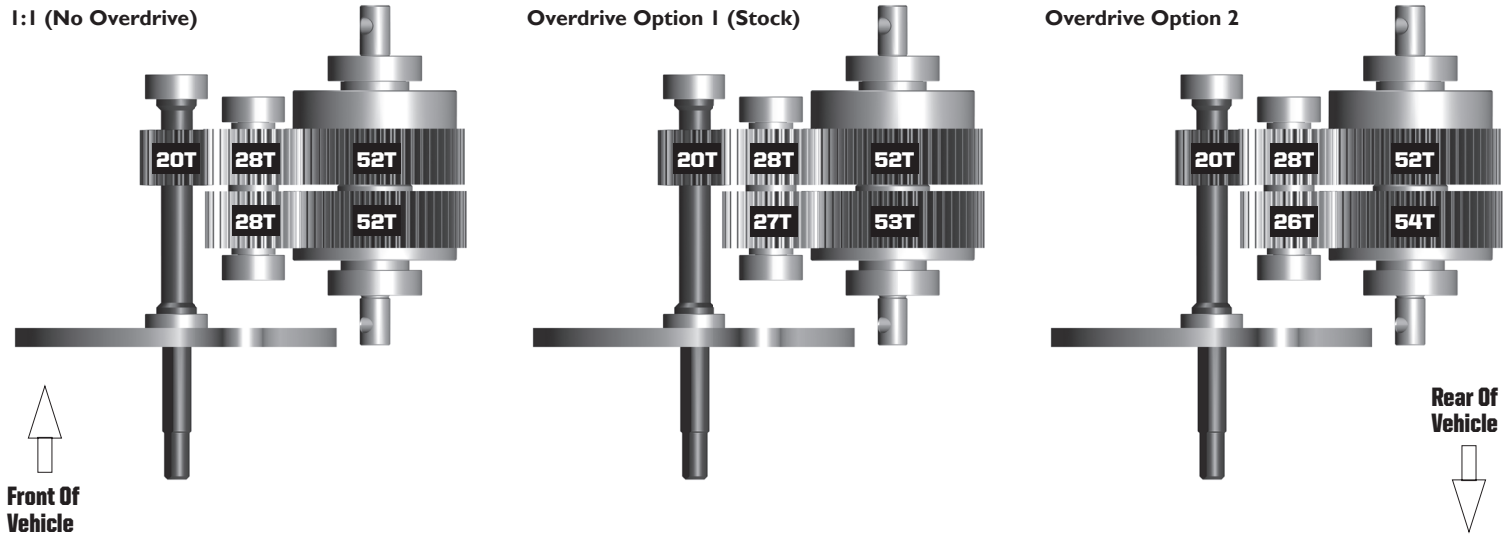

GATE 03 STEALTH X: BUILD CONFIGURATION: MOTOR MOUNT FACING FRONT (OPTIONAL - REQUIRES #42024 - TOP SHAFT)

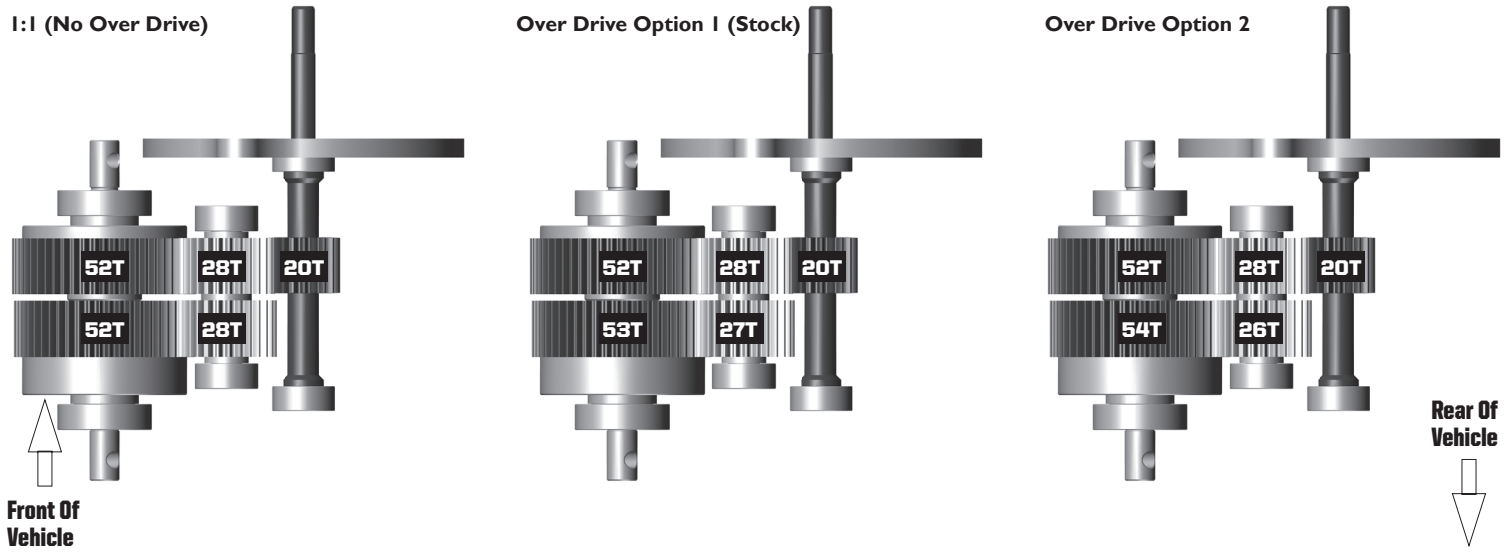

TRAIL TIPS AND CHECKLIST

PREPARING TO HIT THE TRAIL:
When preparing to hit the trail, it's a good idea to have a checklist to make sure you have everything and don't end up having to head back early. We've compiled a checklist of the things we think you'll need on the trail. We've also left some space for you to add your specific items to the list. Keep in mind these are suggestions and every person will require different items. Weather and altitude will also dictate how much food and water a person will require. Do a little research first before heading out for a full day on the trail.

- ☐ Vehicle with charged battery
- ☐ 1-2 spare charged batteries for your rig
- ☐ Radio with charged batteries
- ☐ Spare radio batteries
- ☐ Check all nuts and screws and tighten them. Including wheel nuts!
- ☐ Spare parts (nuts, screws, body clips, and anything that may wear or break)
- ☐ Backpack
- ☐ Water (2 liters per person minimum)
- ☐ Snacks (protein bars, trailmix, etc.)
- ☐ Sturdy shoes (Hiking boots preferably or something with grip and ankle support)
- ☐ Element hat or beanie
- ☐ Element hoodie or jacket
- ☐ Sunscreen
- ☐ Bug spray
- ☐ Lip balm
- ☐ Nut drivers (Factory Team Nut Drivers #1507, 1508)
- ☐ Allen wrenches (Factory Team Hex Driver set #1655)
- ☐ Cell phone and charger
- ☐ Headlight or flashlight with spare batteries
- ☐ Compact action camera
- ☐ Camera
- ☐ Tripod
- ☐ _____
- ☐ _____
- ☐ _____
- ☐ _____
- ☐ _____
- ☐ _____

TREAD LIGHTLY:
Remember, when driving your rig out on the trails, it's important to tread lightly. We all know that the best place to enjoy our hobby is out in nature, and that means we need to preserve it for future hobbyist so we all have a place to enjoy. Here are a few tips to remember when out on the trail.

- **Pack In/Pack Out:**
  Don't leave anything behind. Whether it's trash, parts, or food. If you brought it, take it with you.
- **National and Public Parks:**
  If visiting a national park, leave the RC cars at home. It is illegal to drive any radio-control vehicle within national park boundaries. Public parks are slightly different, some may allow radio-control vehicles and others may not. Check with your local officials before driving in a public park.
- **Be Considerate:**
  Wherever you drive your radio-control car, always be considerate of others. Hikers, bicyclists, and animals should always be given the right of way.
- **Keep It Quiet:**
  If you're sharing an area with other people, try to keep the noise to a minimum. If you come across animals or anglers, please be considerate and give them space.
- **Give A Hoot, Don't Pollute:**
  When enjoying the outdoors take your trash with you. Not only is it bad for the environment, it's unsightly. If you see trash, pick it up, even if it isn't yours. If we all do our part we can work together to keep our planet beautiful for future generations.
- **Only You Can Prevent Wild Fires:**
  Some of us like to mix camping with RC cars. This is great! Just remember to follow all safety precautions and put out any camp fires before calling it a night. Also, be sure to unplug and **store all LiPo batteries in LiPo sacks and a fire resistant storage device**.

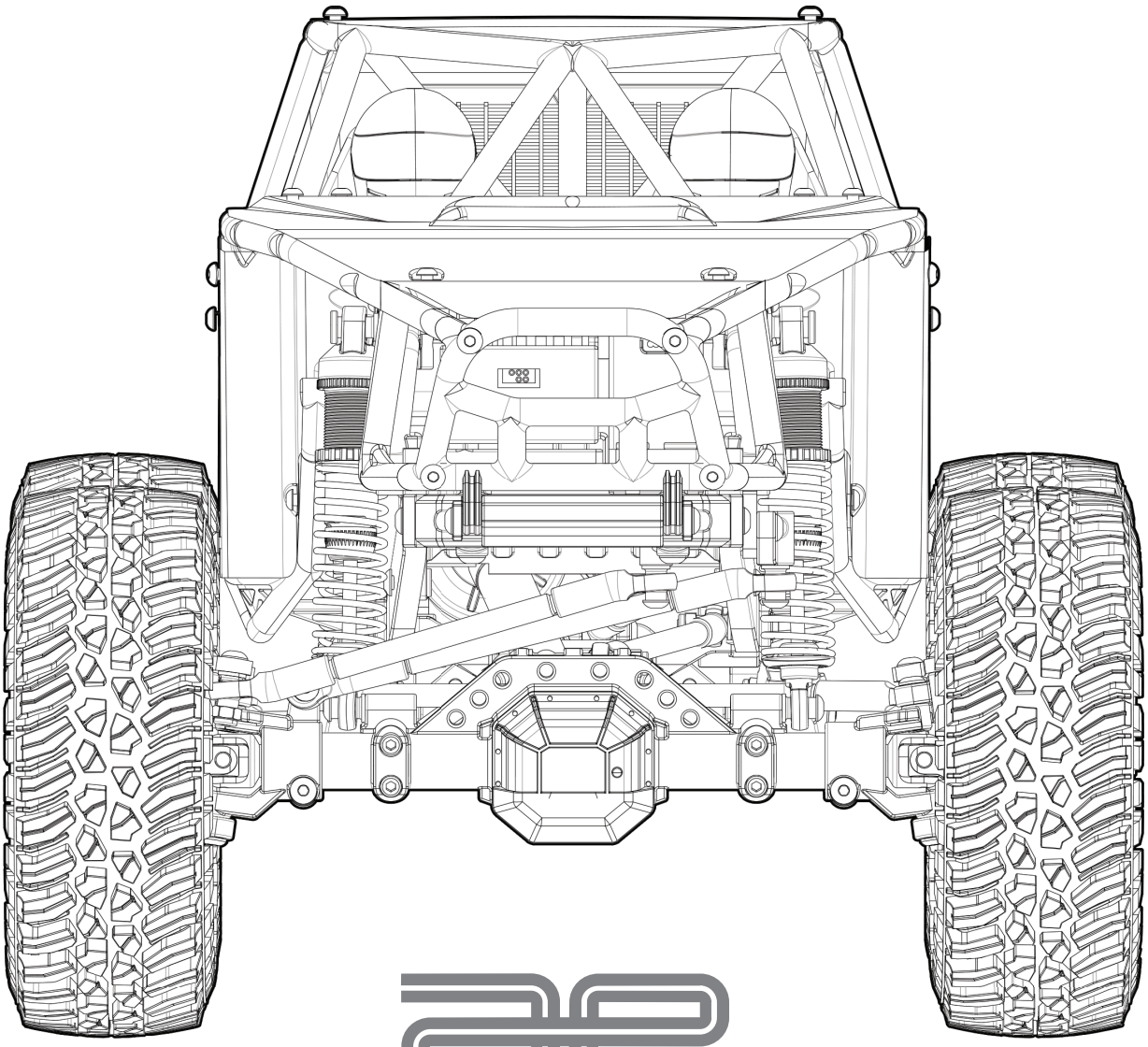

ASSOCIATED ELECTRICS, INC.
21062 BAKE PARKWAY LAKE FOREST, CA 92630 USA

CALL: (949) 544-7500 - FAX: (949) 544-7501

CHECK OUT THE FOLLOWING WEB SITES FOR ALL OF OUR KITS,
CURRENT PRODUCTS, NEW RELEASES, SETUP HELP, TIPS, AND RACING INFO!
WWW.ASSOCIATEDELECTRICS.COM

ElementRC @Element_RC